Polo Estate 1998 ➤

4-cyl. diesel engine, Mech. (without intermediate shaft)									
Engine ID	AGP	AGR	ALH	AQM	ASV	AYQ			

Edition 10.1999

satelettronica

Protected by copyright. Copying for private or commercial purposes, in part or in whole, is not permitted unless authorised by Volkswagen AG. Volkswagen AG does not guarantee or accept any liability with respect to the correctness of information in this document. Copyright by Volkswagen AG.

List of Workshop Manual Repair GroupsList of Workshop Manual Repair GroupsList of Workshop Manual Repair Groups

Polo Estate 1998 ➤

4-cyl. diesel engine, Mech. (without intermediate shaft)

Repair Group

00 - Technical data
10 - Removing and installing engine
13 - Crankshaft group
15 - Cylinder head, Valve gear
17 - Lubrication
19 - Cooling system
20 - Fuel supply system
21 - Charging
26 - Exhaust system

Protected by copyright. Copying for private or commercial purposes, in part or in whole, is not permitted unless authorised by Volkswagen AG. Volkswagen AG does not guarantee or accept any liability with respect to the correctness of information in this document. Copyright by Volkswagen AG.

satelettronica

Technical information should always be available to the foremen and mechanics, because their careful and constant adherence to the instructions is essential to ensure vehicle road-worthiness and safety. In addition, the normal basic safety precautions for working on motor vehicles must, as a matter of course, be observed.

All rights reserved.
No reproduction without prior agreement from publisher.

Copyright © 2011 Volkswagen AG, Wolfsburg

00056407420

Contents

00 - Technical data 1
1 Technical data 1
1.1 Technical data 1
1.2 Engine number 1
1.3 Engine data 1

10 - Removing and installing engine 3
1 Removing and installing engine 3
1.1 Removing and installing engine 3
1.2 Notes on removing 4
1.3 Securing engine to assembly stand 7
1.4 Notes on installing 8
1.5 Tightening torques 10
1.6 Assembly mountings 10
1.7 Renewing bonded rubber bushes on subframe 12
1.8 Additional information and removal instructions for vehicles with air conditioner 13

13 - Crankshaft group 15
1 Dismantling and assembling engine 15
1.1 Dismantling and assembling engine 15
1.2 Removing and installing ribbed belt 25
2 Removing and installing sealing flange and pressure plate/flywheel/drive plate 27
2.1 Removing and installing sealing flange and pressure plate/flywheel/drive plate 27
2.2 Renewing crankshaft oil seal -pulley end 32
2.3 Removing and installing front sealing flange 35
3 Removing and installing crankshaft 38
3.1 Removing and installing crankshaft 38
3.2 Crankshaft dimensions 41
4 Dismantling and assembling pistons and conrods 42
4.1 Dismantling and assembling pistons and conrods 42
4.2 Checking piston projection at TDC 48
4.3 Piston and cylinder dimensions 49

15 - Cylinder head, Valve gear 50
1 Removing and installing cylinder head 50
1.1 Removing and installing cylinder head 50
1.2 Dismantling and assembling intake manifold 55
1.3 Removing, installing and tensioning toothed belt 60
1.4 Checking semi-automatic toothed belt tensioning roller 66
1.5 Removing and installing cylinder head 68
1.6 Checking compression pressures 70
2 Servicing valve gear 72
2.1 Servicing valve gear 72
2.2 Reworking valve seats 79
2.3 Checking valve guides 80
2.4 Renewing valve guides 81
2.5 Renewing valve stem seals 82
2.6 Removing and installing camshaft 85
2.7 Checking hydraulic bucket tappets 89

17 - Lubrication 91
1 Removing and installing parts of the lubrication system 91
1.1 Removing and installing parts of the lubrication system 91

Protected by copyright. Copying for private or commercial purposes, in part or in whole, is not permitted unless authorised by Volkswagen AG. Volkswagen AG does not guarantee or accept any liability with respect to the correctness of information in this document. Copyright by Volkswagen AG.
satelettronica

1.2 Removing and installing sump . . . 102
1.3 Checking oil pressure and oil pressure switch . . . 105

19 - Cooling system . . . 107
1 Removing and installing parts of cooling system . . . 107
1.1 Removing and installing parts of cooling system . . . 107
1.2 Parts of cooling system body side . . . 108
1.3 Parts of cooling system engine side . . . 112
1.4 Draining and filling cooling system . . . 115
1.5 Removing and installing radiator . . . 118
1.6 Removing and installing coolant pump . . . 120
1.7 Removing and installing thermostat . . . 122

20 - Fuel supply system . . . 124
1 Removing and installing parts of fuel supply system . . . 124
1.1 Removing and installing parts of fuel supply system . . . 124
1.2 Removing and installing fuel tank with its attachments, Polo Classic, Polo Estate . . . 125
1.3 Removing and installing fuel tank with its attachments, Caddy . . . 130
1.4 Servicing fuel filter . . . 136
1.5 Safety precautions when working on the fuel supply system . . . 138
1.6 Rules for cleanliness . . . 139
1.7 Removing and installing fuel tank . . . 139
1.8 Servicing accelerator mechanism . . . 142
1.9 Checking accelerator pedal position sender . . . 144
1.10 Adjusting pedal position sender . . . 147

21 - Charging . . . 149
1 Charge air system with turbocharger . . . 149
1.1 Charge air system with turbocharger . . . 149
1.2 Safety precautions . . . 149
1.3 Rules for cleanliness . . . 149
1.4 Removing and installing turbocharger with attachments . . . 149
1.5 Removing and installing parts of charge air cooling . . . 160
1.6 Turbocharger hose/pipe connections . . . 163
2 Checking charge pressure system . . . 164
2.1 Checking charge pressure system . . . 164
2.2 Checking pressure unit for charge pressure regulating valve . . . 164
2.3 Removing and installing pressure unit for charge pressure regulating valve . . . 165
2.4 Checking charge pressure control . . . 166

26 - Exhaust system . . . 173
1 Removing and installing parts of exhaust system . . . 173
1.1 Removing and installing parts of exhaust system . . . 173
2 Exhaust gas recirculation system: Engine codes AGR, ALH, ASV . . . 177
2.1 Exhaust gas recirculation system: Engine codes AGR, ALH, ASV . . . 177
2.2 Removing and installing parts of exhaust gas recirculation system . . . 178
2.3 Vacuum hose connection diagram . . . 180
2.4 Checking exhaust gas recirculation valve (mechanical) . . . 180
2.5 Checking exhaust gas recirculation . . . 182
2.6 Checking EGR valve . . . 184
3 Exhaust gas recirculation system: Engine codes AGP, AQM, AYQ . . . 186
3.1 Exhaust gas recirculation system: Engine codes AGP, AQM, AYQ . . . 186
3.2 Removing and installing parts of exhaust gas recirculation system . . . 187
3.3 Vacuum hose connection diagram . . . 188
3.4 Checking exhaust gas recirculation valve (mechanical) . . . 189
3.5 Checking EGR valve . . . 190

Protected by copyright. Copying for private or commercial purposes, in part or in whole, is not permitted unless authorised by Volkswagen AG. Volkswagen AG does not guarantee or accept any liability with respect to the correctness of information in this document. Copyright by Volkswagen AG.
satelettronica

00 - Technical data

1 - Technical data

1.1 - Technical data

1.2 - Engine number

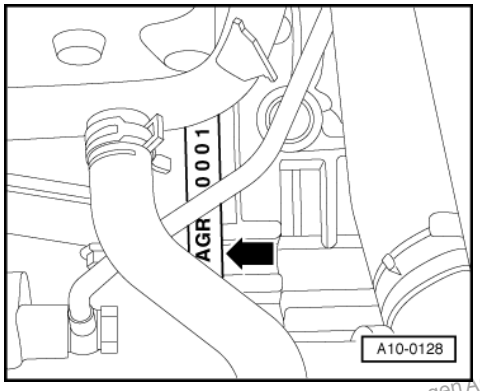

-> The engine number ("Code letters" and "Serial number") can be found on the joint between engine/gearbox.

The engine number consists of up to nine characters (alphanumeric). The first part (maximal 3 characters) makes up the "engine code", and the second part (6 characters), the "serial number". If more than 999,999 engines with the same engine code are produced, the first of the six characters is replaced with a letter.

Additionally there is a sticker on the toothed belt guard with "Engine code" and "Serial number".

The engine code is also included on the vehicle data plate.

1.3 - Engine data

Engine code		AGP	AGR	ALH
Manufactured		10.99 ▸	10.99 ▸	10.99 ▸
Exhaust emissions fulfil		MVEG 2 standard	MVEG 2 standard	D3 standard
Capacity	ltr.	1.9	1.9	1.9
Output	kW at rpm	50/4200	66/4000	66/3750
Torque	Nm at rpm	133/2200...2600	210/1900	210/1900
Bore	ø mm	79.5	79.5	79.5
Stroke	mm	95.5	95.5	95.5
Compression ratio		19.5	19.5	19.5
CN	mind.	49	49	49
Firing order		1-3-4-2	1-3-4-2	1-3-4-2
Catalyst		x	x	x
Exhaust gas recirculation		x	x	x
Charging		-	x	x

Protected by copyright. Copyright by Volkswagen AG. Volkswagen AG does not guarantee or assume any liability with respect to the correctness of information. Use of this document, in part or in whole, not permitted without authorisation of Volkswagen AG.
satelettronica

Engine code	AGP	AGR	ALH
Charge air cooling	-	x	x

Engine code		AGP	AGR	ALH
Manufactured		10.99 ▸	10.99 ▸	10.99 ▸
Exhaust emissions fulfil		MVEG 2 standard	MVEG 2 standard	D3 standard
Capacity	ltr.	1.9	1.9	1.9
Output	kW at rpm	50/4200	66/4000	66/3750
Torque	Nm at rpm	133/2200...2600	210/1900	210/1900
Bore	ø mm	79.5	79.5	79.5
Stroke	mm	95.5	95.5	95.5
Compression ratio		19.5	19.5	19.5
CN	min.	49	49	49
Firing order		1-3-4-2	1-3-4-2	1-3-4-2
Catalyst		x	x	x
Exhaust gas recirculation		x	x	x
Charging		-	x	x
Charge air cooling		-	x	x

Protected by copyright. Copying for private or commercial purposes, in part or in whole, is not permitted unless authorised by Volkswagen AG. Volkswagen AG does not guarantee or accept any liability with respect to the correctness of information in this document. Copyright by Volkswagen AG.
satelettronica

10 - Removing and installing engine

1 - Removing and installing engine

1.1 - Removing and installing engine

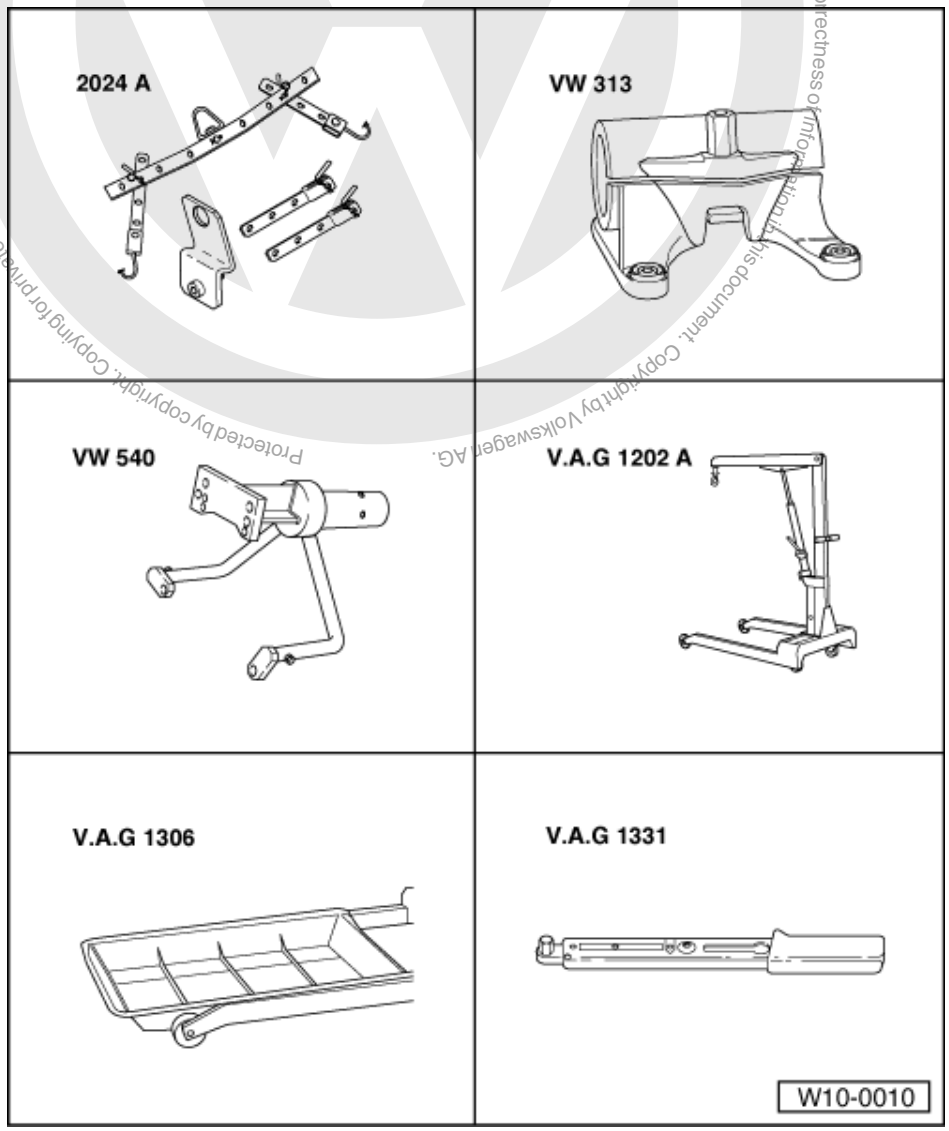

Special tools, workshop equipment, test and measuring appliances and auxiliary items required

- 2024 A Lifting tackle
- VW 313 Support clamp
- VW 540 Engine and gearbox support
- V.A.G 1202 A Workshop crane
- V.A.G 1306 Drip tray
- V.A.G 1331 Torque wrench (5...50 Nm)

Protected by copyright. Copying for private or commercial purposes, in part or in whole, is not permitted unless authorised by Volkswagen AG. Volkswagen AG does not guarantee or accept any liability with respect to the correctness of information in this document. Copyright by Volkswagen AG.
satelettronica

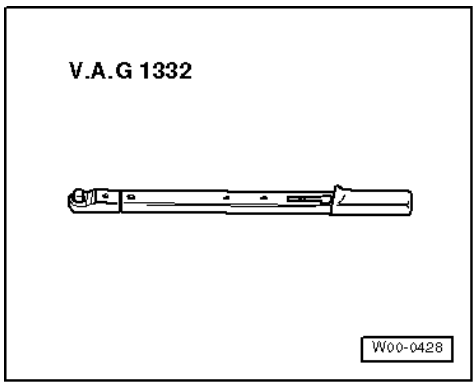

- V.A.G 1332 Torque wrench (40...200 Nm)

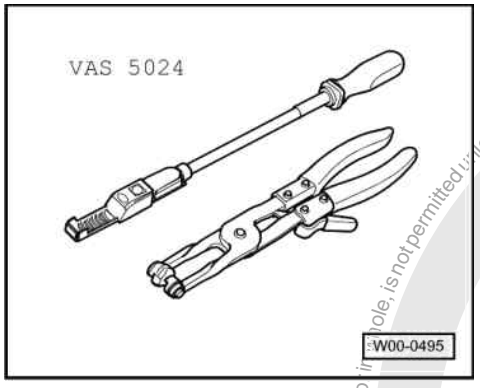

- VAS 5024 Assembly tool for spring-type clips
- G 000 100 grease (vehicles with manual gearbox)
- Cable tie

1.2 - Notes on removing

Note:

Check whether a coded radio is installed as during the forthcoming work sequences the battery earth strap must be disconnected. Obtain radio code first if necessary.

- The engine is removed forwards together with the gearbox.
- With ignition switched off disconnect battery earth strap.
- All cable ties which are opened or cut open when removing engine, must be replaced in the same position when installing engine.
- Remove engine cover.
- Remove battery.
- Remove air cleaner.
- Disconnect fuel supply and return pipes at fuel filter.
- Seal the pipes so that the fuel system is not contaminated by dirt etc.
- Observe rules for cleanliness => Page 139 .

Engine codes AGR, ALH, ASV

- Remove connecting pipe between charge air cooler and intake manifold/pressure hose.

Continued for all engine codes

- Remove noise insulation tray.
- Open and close the expansion tank sealing cap to release pressure in cooling system.
- Drain coolant => Page 115 .
- Pull connectors off thermo-switch and radiator fan.

Protected by copyright. Copyright by Volkswagen AG.
Copying for private or commercial purposes, in part or in whole, is not permitted unless authorised by Volkswagen AG. Volkswagen AG does not guarantee or accept any liability with respect to the correctness of information in this document.
satelettronica

- Pull radiator coolant hoses off engine using spring-type clip pliers V.A.G 1921 or VAS 5024.

Engine codes AGR, ALH, ASV

- Remove charge air cooler.

Continued for all engine codes

- Removing lock carrier with attachments:

=> General body repairs; Repair group 50; Body, front; Removing and installing lock carrier with attachments. Body, front Removing and installing lock carrier with attachments.

Vehicles with air conditioner:

- Observe additional information and removal instructions => Page 13 .

- Pull vacuum and breather hoses off engine.
- Disconnect all electric wires from gearbox, alternator and starter and move clear.

Engine codes AGR, ALH, ASV

- Remove hydraulic clutch slave cylinder:

=> 5-Speed manual gearbox 02J; Repair group 30; Servicing clutch control Servicing clutch control

- Disconnect selector mechanism from gearbox.

=> 5-Speed manual gearbox 02J; Repair group 34; Servicing selector mechanism Servicing selector mechanism

Note:

Clutch pedal must not be depressed.

Engine codes AGP, AQM, AYQ

- Remove hydraulic clutch slave cylinder:

=> 5-Speed manual gearbox 02K; Repair group 30; Servicing clutch control Servicing clutch control

- Disconnect selector mechanism from gearbox.

=> 5-Speed manual gearbox 02K; Repair group 34; Servicing selector mechanism Servicing selector mechanism

Note:

Clutch pedal must not be depressed.

Continued for all engine codes

- Remove ribbed belt => Page 25 .
- Remove power assisted steering vane pump with bracket and lay to side; hoses remain connected.

=> Running gear, Axles, Steering; Repair group 48; Assembly overview: vane pump, reservoir, hydraulic pipes Assembly overview: vane pump, reservoir, hydraulic pipes

- Unscrew power steering reservoir and tie-up.

Engine codes AGR, ALH, ASV

- Unscrew front exhaust pipe from turbocharger.

satelettronica

Engine codes AGP, AQM, AYQ

- Disconnect exhaust pipe from exhaust manifold.

Continued for all engine codes

- Disconnect drive shafts at gearbox:

=> Running gear, Axles, Steering; Repair group 40; Removing and installing drive shaft Removing and installing drive shaft

- Remove pressure pipe for power steering from subframe.

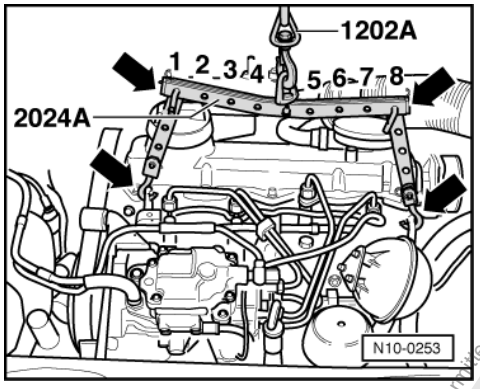

- -> Attach lifting tackle 2024 A as follows and lift slightly with workshop crane V.A.G 1202 A:

  Pulley end:
  4th hole in hook at position 1

  Flywheel end:
  4th hole in hook at position 8

Warning!
The hooks and locating pins must be secured with locking pins -arrows-.

Notes:

- The positions marked 1...4 on the bar must be towards the pulley end.
- The holes in the hook rails are counted up from the hook.

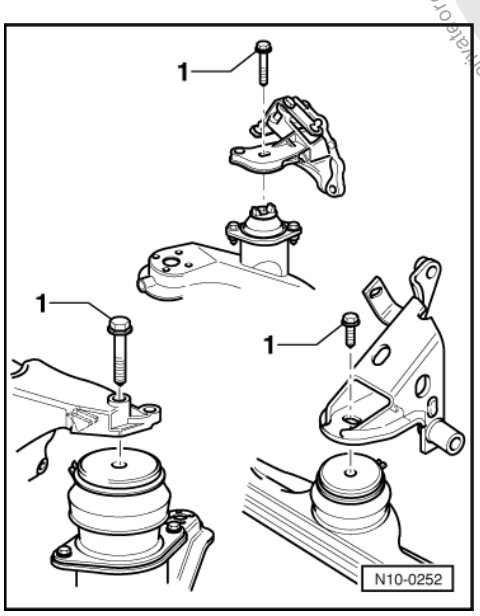

Protected by copyright. Copying for private or commercial purposes, in part or in whole, is not permitted unless authorised by Volkswagen AG. Volkswagen AG does not guarantee or accept any liability with respect to the correctness of information in this document. Copyright by Volkswagen AG.
satelettronica

- -> Remove securing bolts -1- from assembly mounting.
- Pull assembly out forwards. When doing this, if necessary turn assembly and lower slightly.

Note:

When the assembly is lifted off, it must be carefully guided to prevent damage to the bodywork.

When working on the engine, it should be secured to the engine stand using the engine bracket VW 540.

1.3 - Securing engine to assembly stand

When working on the engine, it should be secured to the assembly stand support clamp VW 313 using the engine and gearbox box support VW 540.

Work sequence

- Remove gearbox.

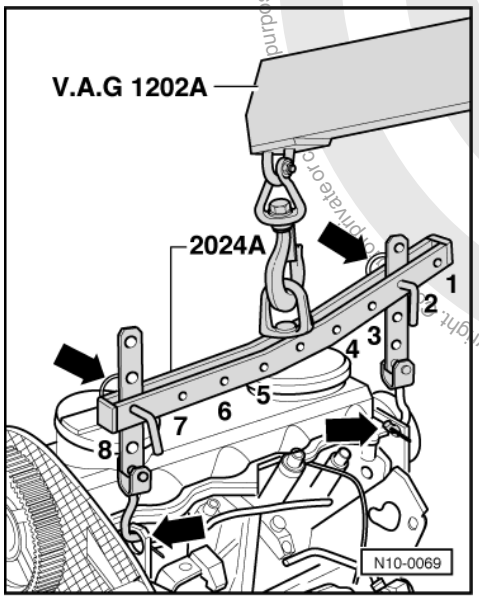

- -> Attach lifting tackle 2024A as follows .

  Pulley end:
  2nd hole in hook at position 2

  Flywheel end:
  3rd hole in hook at position 8

Warning! The hooks and locating pins must be secured with locking pins -arrows-.

Notes:

- The positions marked 1...4 on the bar must be towards the pulley end.

Protected by copyright. Copyright by Volkswagen AG. Volkswagen AG does not guarantee or accept any liability with respect to the correctness of information in this document. Copyright by Volkswagen AG. Copy for private or commercial purposes, in part or in whole, is not permitted unless authorised by Volkswagen AG.
satelettronica

- The holes in the hook rails are counted up from the hook.

- Secure engine to support clamp VW 313 using engine and gearbox bracket VW 540.

1.4 - Notes on installing

Installation is carried out in the reverse sequence, when doing this note the following:

- Check clutch release bearing for wear, renew if necessary.
- Lightly grease clutch release bearing, release bearing guide sleeve and splines on input shaft with G 000 100.

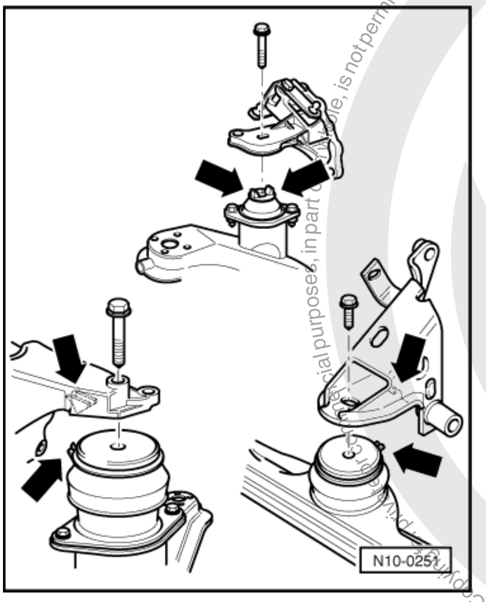

- Check whether the dowel sleeves for centring engine/gearbox are in the cylinder block and install if necessary.
- When installing the assembly, ensure sufficient clearance to drive shafts.
- -> When installing the assembly, take note that the bonded rubber bush lugs rear left, rear front and right locate in the inserts on the consoles -arrows-.
- Align engine mountings stress-free by rocking.

Note:

Assembly mounting tightening torques

=> Page 10 .

- Electrical connections and routing:

=> Electrical system; Repair group 97

- Install drive shafts:

=> Running gear, Axles, Steering; Repair group 40; Removing and installing drive shaft Removing and installing drive shaft

- Install front exhaust pipe => Page 173 , Removing and installing parts of exhaust system.

Engine codes AGR, ALH, ASV

- Install hydraulic clutch slave cylinder:

Protected by copyright. Copying for private or commercial purposes, in part or in whole, is not permitted unless authorised by Volkswagen AG. Volkswagen AG does not guarantee or accept any liability with respect to the correctness of information in this document. Copyright by Volkswagen AG.
satelettronica

=> 5-Speed manual gearbox 02J; Repair group 30; Servicing clutch control Servicing clutch control

- Install selector mechanism and adjust cable selector mechanism if necessary:

=> 5-Speed manual gearbox 02J; Repair group 34; Servicing selector mechanism Servicing selector mechanism

Engine codes AGP, AQM, AYQ

- Install hydraulic clutch slave cylinder:

=> 5-Speed manual gearbox 02K; Repair group 30; Servicing clutch control Servicing clutch control

- Install selector mechanism and adjust cable selector mechanism if necessary:

=> 5-Speed manual gearbox 02K; Repair group 34; Servicing selector mechanism Servicing selector mechanism

Continued for all engine codes

- Installing lock carrier with attachments:

=> General body repairs, exterior; Repair group 50; Body, front; Removing and installing lock carrier with attachments. Body, front Removing and installing lock carrier with attachments.

Vehicles with air conditioner

- Installing air conditioner compressor:

=> Heating, Air conditioning; Repair group 87; Removing and installing compressor bracket Removing and installing compressor bracket

Continuation for all vehicles

- Installing P.A.S. vane pump:

=> Running gear, Axles, Steering; Repair group 48; Assembly overview: vane pump, reservoir, hydraulic lines; Removing and installing power steering vane pump. Assembly overview: vane pump, reservoir, hydraulic lines Removing and installing power steering vane pump.

- Tighten power steering reservoir nuts/bolts.

Engine codes AGR, ALH, ASV

- Install connecting pipe between charge air cooler and intake manifold/connecting hose.
- Install charge air cooler.

Continued for all engine codes

- Fill with coolant => Page 115
- Install ribbed belt => Page 25
- Install noise insulation tray.
- Check headlight adjustment and adjust if necessary:

=> Maintenance booklet

- Carry out a test drive and interrogate fault memory:

=> Repair group 01; Self-diagnosis; Interrogating fault memory Self-diagnosis Interrogating fault memory

Protected by copyright. Copying for private or commercial purposes, in part or in whole, is not permitted unless authorised by Volkswagen AG. Volkswagen AG does not guarantee or accept any liability with respect to the correctness of information in this document. Copyright by Volkswagen AG.
satelettronica

1.5 - Tightening torques

Bolted connection		Tightening torque
Bolts, nuts	M 6	10 Nm
	M 8	20 Nm
	M10	45 Nm
	M 12	60 Nm
in variation of this		
Front exhaust pipe to turbocharger		25 Nm
Exhaust pipe to manifold		40 Nm
Engine carrier to body		60 Nm

Note:

Assembly mounting tightening torques

=> Page 10 .

1.6 - Assembly mountings

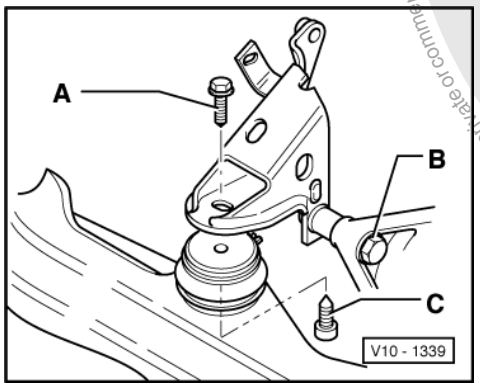

Tightening torques

(Bolts oiled)

-> Front assembly mounting

A = 55 Nm
B = 45 Nm
C = 55 Nm

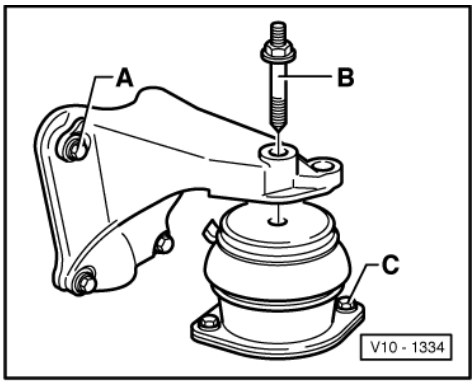

Protected by copyright. Copying for private or commercial purposes, in part or in whole, is not permitted unless authorised by Volkswagen AG. Volkswagen AG does not guarantee or accept any liability with respect to the correctness of information in this document. Copyright by Volkswagen AG.
satelettronica

-> Rear right assembly mounting

A = 25 Nm
B = 60 Nm
C = 30 Nm

Engine codes AGR, ALH, ASV

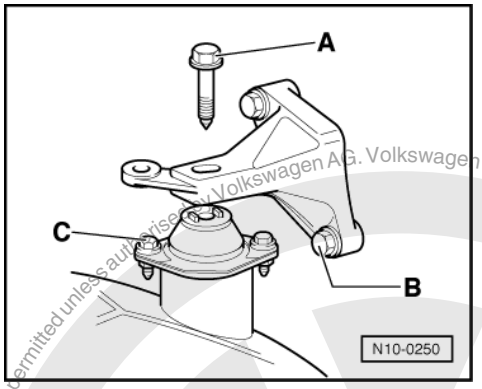

-> Rear left engine mounting

A = 50 Nm
B = 25 Nm
C = 25 Nm

Engine codes AGP, AQM, AYQ

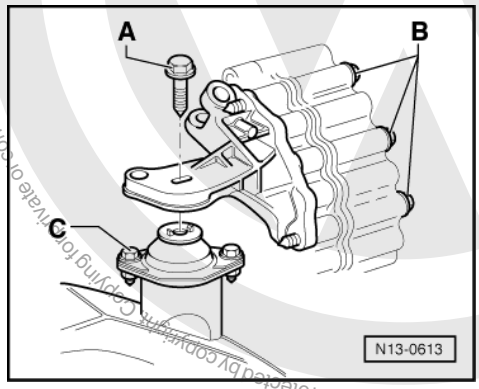

-> Rear left engine mounting

A = 60 Nm
B = 35 Nm
C = 30 Nm

Protected by copyright. Copying for private or commercial purposes, in part or in whole, is not permitted unless authorised by Volkswagen AG. Volkswagen AG does not guarantee or accept any liability with respect to the correctness of information in this document. Copyright by Volkswagen AG.
satelettronica

1.7 - Renewing bonded rubber bushes on subframe

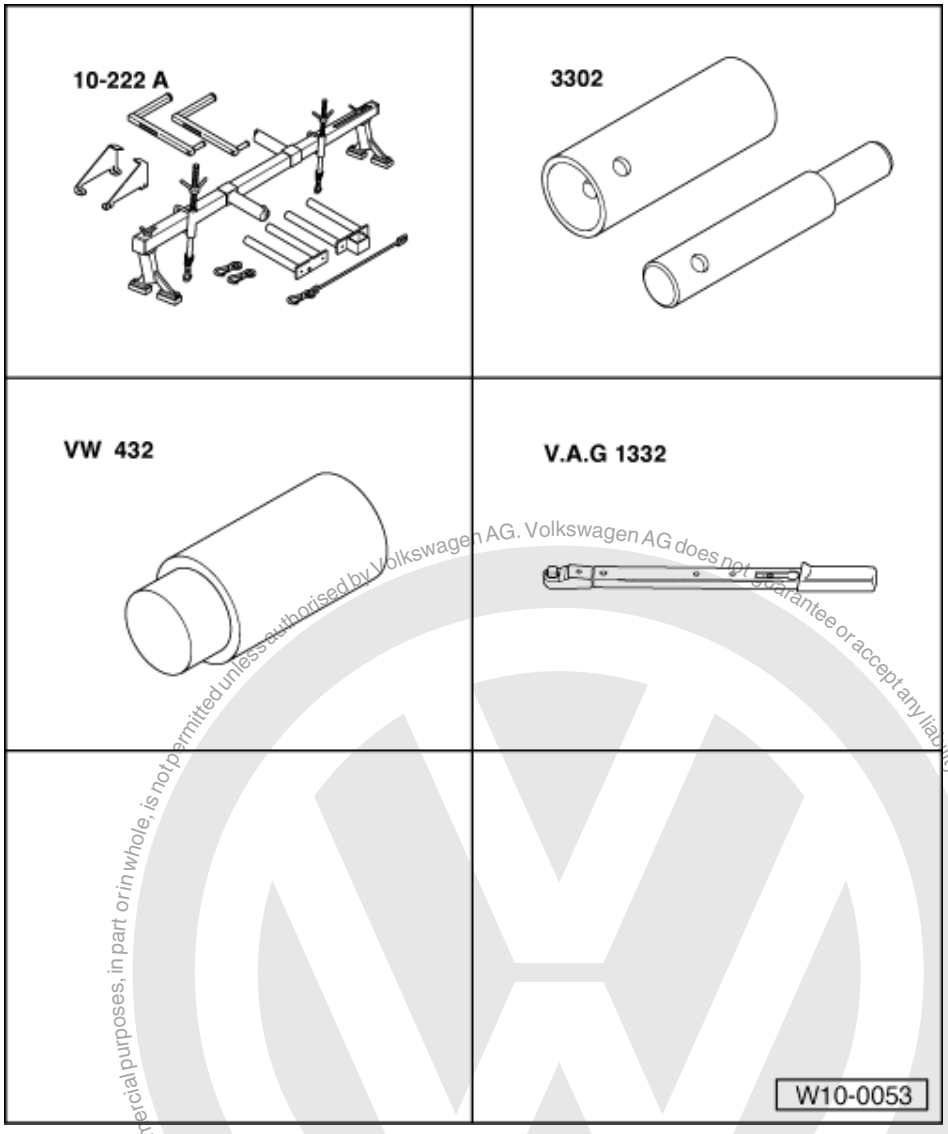

Special tools, workshop equipment, test and measuring appliances and auxiliary items required

- 10-222A Support device with legs 10-222A/1
- 3302 Peening tool
- VW 432 Thrust piece
- V.A.G 1332 Torque wrench (40...200 Nm)

Work sequence

- Fit engine support bracket 10-222A with legs 10-222A/1.

Protected by copyright. Copying for private or commercial purposes, in part or in whole, is not permitted unless authorised by Volkswagen AG. Volkswagen AG does not guarantee or accept any liability with respect to the correctness of information in this document. Copyright by Volkswagen AG.
satelettronica

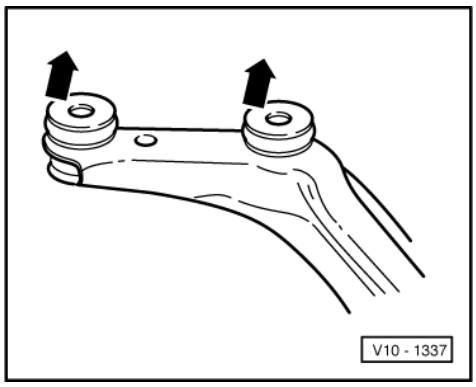

- Locate support bracket in lifting eye on left of cylinder head and take-up weight of engine.
- Remove engine carrier.
- -> Lever off washers from the spacer sleeves with pliers (replace any washers which are damaged e.g. bent washers).
- Pull out spacer sleeves and detach rubber mounting.
- Fit new rubber mounting and insert spacer sleeves as far as possible.

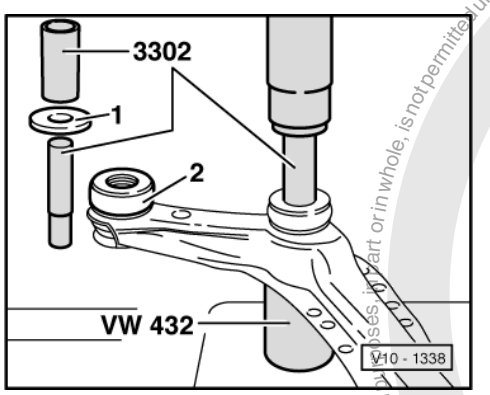

- -> Fit washers -1- over peening tool 3302 onto the rubber mounting -2-.
- Fit press sleeve of peening tool 3302 and using a press, press the washers onto the spacer sleeves and peen. Use VW 432 as packing.
- Remove any resulting protrusion/burr on the peening.
- Install subframe.
  Torque setting: 60 Nm

1.8 - Additional information and removal instructions for vehicles with air conditioner

Warning!
The air conditioning system refrigerant circuit must not be opened.

Note:

To prevent damage to condenser and also to the refrigerant lines/hoses, ensure that the pipes and hoses are not stretched, kinked or bent.

To facilitate removing and installing the engine without opening the refrigerant circuit:

- Remove retaining clamp(s) from refrigerant pipes.
- Remove ribbed belt => Page 25 .
- Removing lock carrier with attachments:

Protected by copyright. Copying for private or commercial purposes, in part or in whole, is not permitted unless authorised by Volkswagen AG. Volkswagen AG does not guarantee or accept any liability with respect to the correctness of information in this document. Copyright by Volkswagen AG.
satelettronica

=> General body repairs; Repair group 50; Body, front; Removing and installing lock carrier with attachments. Body, front Removing and installing lock carrier with attachments.

- Unscrew cooler and cooler fan from lock carrier.
- Unscrew condenser from cooler.
- Removing air conditioner compressor:

=> Heating, Air conditioning; Repair group 87; removing and installing compressor bracket removing and installing compressor bracket

- Remove air conditioner compressor and condenser and position to one side so that the refrigerant hoses are not stressed.

Protected by copyright. Copying for private or commercial purposes, in part or in whole, is not permitted unless authorised by Volkswagen AG. Volkswagen AG does not guarantee or accept any liability with respect to the correctness of information in this document. Copyright by Volkswagen AG.
satelettronica

13 - Crankshaft group

1 - Dismantling and assembling engine

1.1 - Dismantling and assembling engine

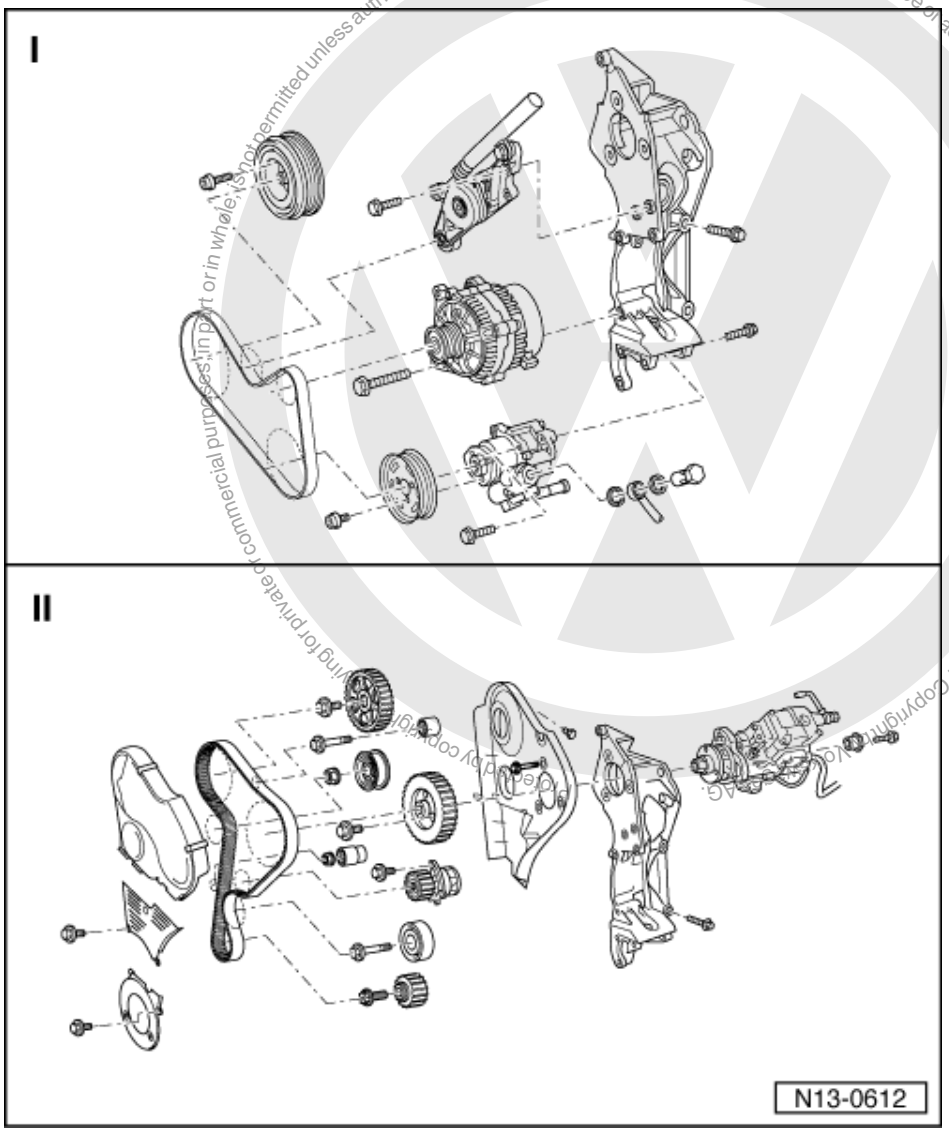

Notes:

- If during repair work, metal shavings or larger quantities of small metal particles are found in the engine oil - caused, for example, by partial seizure of the crankshaft and conrod bearings - then, apart from thoroughly cleaning out the oil passages, it is necessary to renew the oil cooler.
- Defective injectors can cause violent knocking noises in the engine which sound like defective bearings. When this occurs, run engine at idling speed and slacken off injector pipe unions one after the other. If knocking stops when a union is loosened, this indicates that the injector concerned is defective.

satelettronica

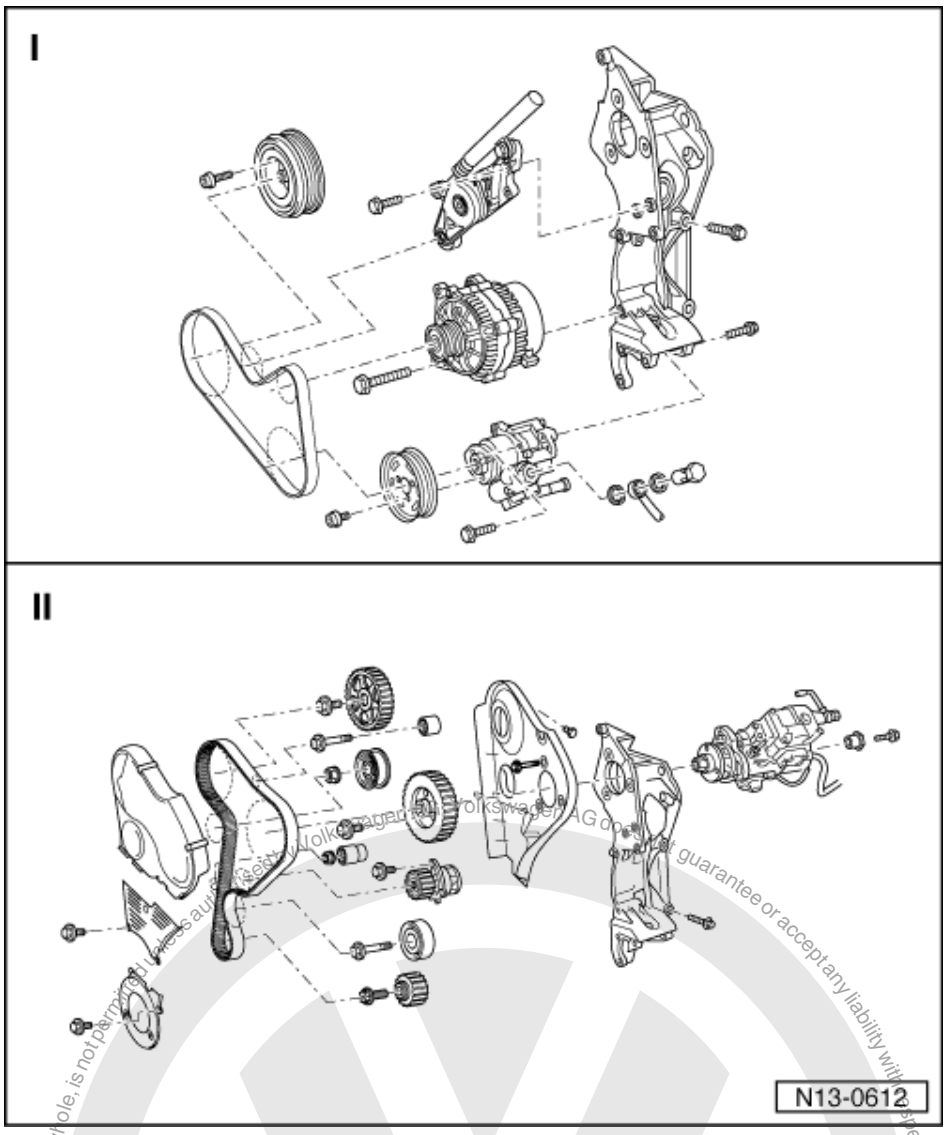

Servicing injectors.

=> Repair group 23; Diesel direct injection system; Servicing injectors Diesel direct injection system Servicing injectors

I =>Page 17

II =>Page 20

Protected by copyright. Copying for private or commercial purposes, in part or in whole, is not permitted unless authorised by Volkswagen AG. Volkswagen AG does not guarantee or accept any liability with respect to the correctness of information in this document. Copyright by Volkswagen AG.

satelettronica

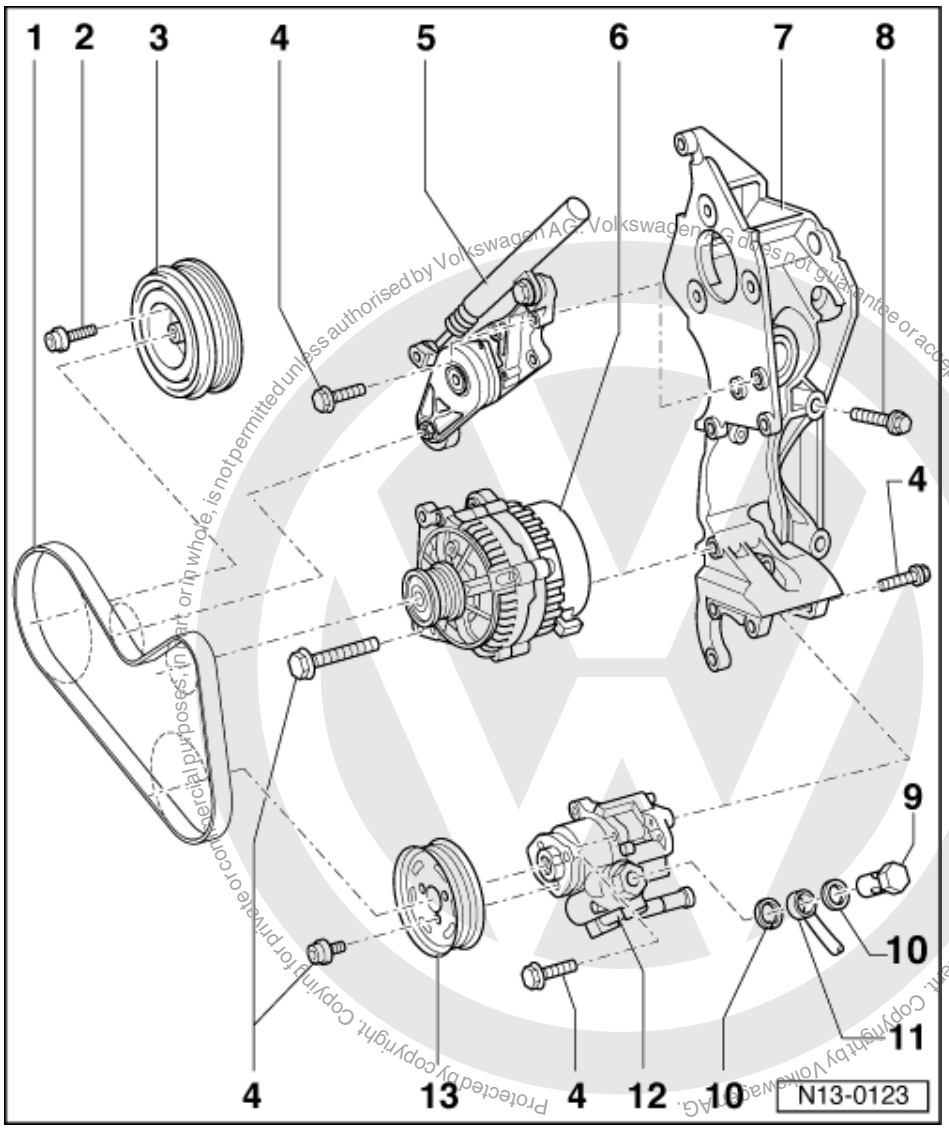

Part I

1 Ribbed belt
- Mark direction of rotation before removing
- Removing and installing
  => Page 25
- Removing and installing on vehicles with air conditioner and additional idler wheel =>Fig. 1

2 10 Nm + 1/4 turn (90 °) further

3 Belt pulley/vibration damper
- Can only be installed in one position. Holes are off-set

4 25 Nm

5 Tensioning element
- Only engine codes AGR, ALH, ASV
- Engine codes AGP, AQM, AYQ without damping

Protected by copyright. Copying for private or commercial purposes, in part or in whole, is not permitted unless authorised by Volkswagen AG. Volkswagen AG does not guarantee or accept any liability with respect to the correctness of information in this document. Copyright by Volkswagen AG.

satelettronica

Protected by copyright. Copyright by Volkswagen AG. Volkswagen AG does not guarantee or accept any liability with respect to the correctness of information in this document. Copying for private or commercial purposes, in part or in whole, is not permitted unless authorised by Volkswagen AG.

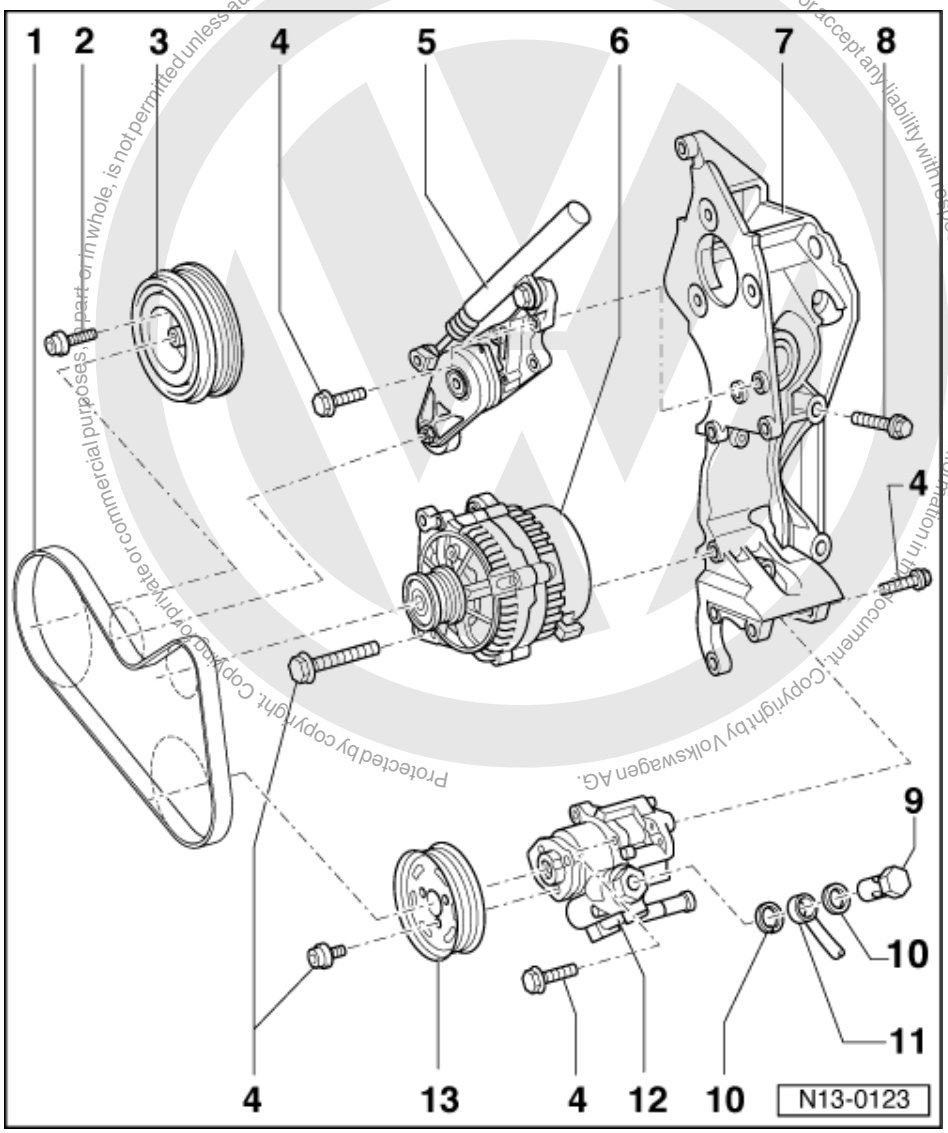

6 Alternator

7 Compact bracket

- For injection pump, alternator and vane pump for power assisted steering
- For vehicles without air conditioner
- Removing and installing compact bracket on vehicles with air conditioner:

=> Heater, air conditioner; Repair group 87; Removing and installing compressor bracket Removing and installing compressor bracket

8 45 Nm

9 Banjo bolt, 30 Nm

10 Seal

- Renew

11 Pressure pipe

satelettronica

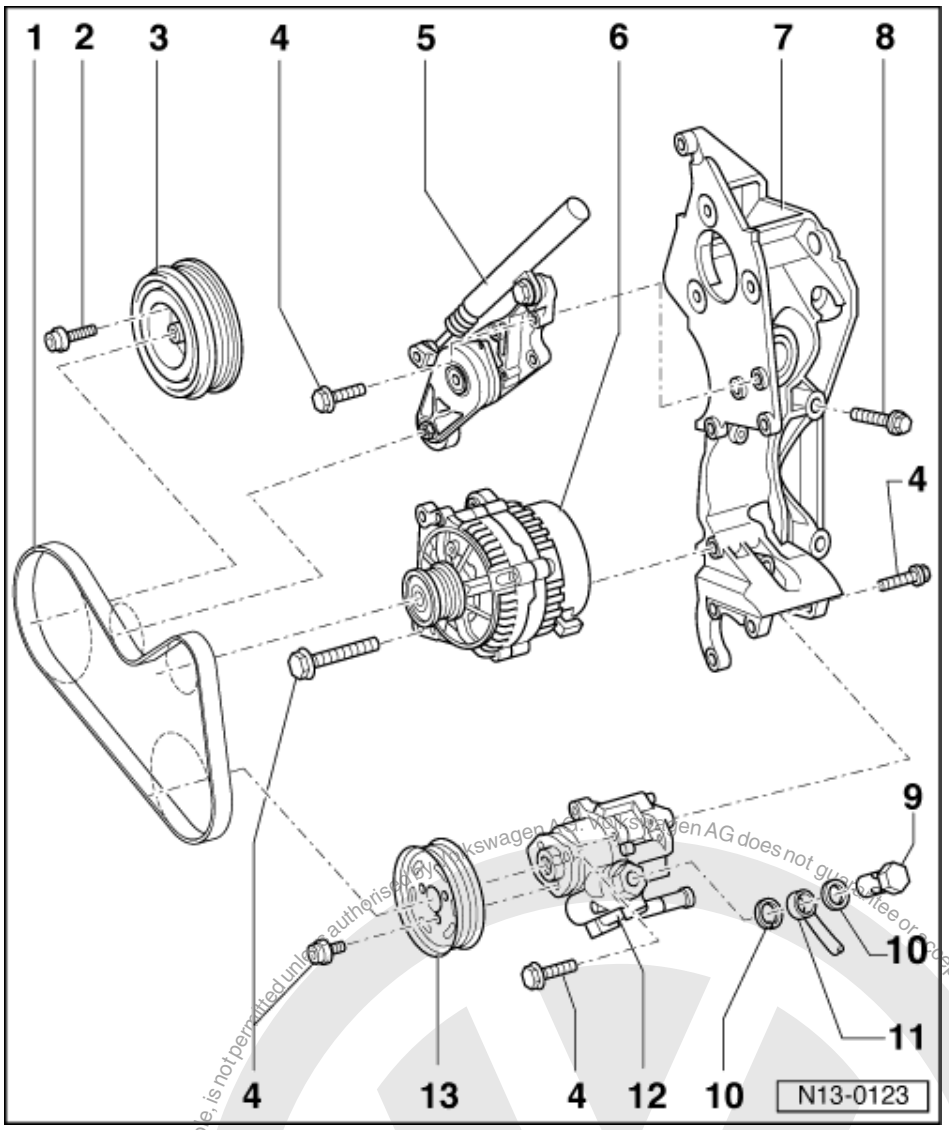

12 Vane pump

- For power assisted steering
- Removing and installing

=> Running gear; Repair group 48; Assembly overview: vane pump, reservoir and hydraulic pipes Assembly overview: vane pump, reservoir and hydraulic pipes

13 Pulley

- For vane pump

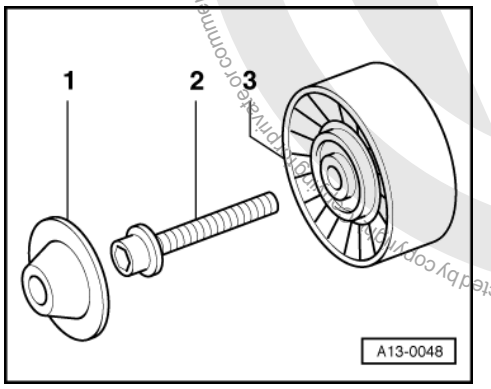

satelettronica

-> Fig.1 Removing and installing idler wheel

Only for vehicles with air conditioner

Removing

- Remove noise insulation tray.
- Remove ribbed belt => Page 25 .
- Lever off cover -1- using a screwdriver.
- Unscrew securing bolt -2- and remove idler wheel -3-.

Installing

- Attach idler wheel -3- and tighten securing bolt -2-.
  Tightening torque 25 Nm.
- Install ribbed belt => Page 25 .
- Install noise insulation tray.

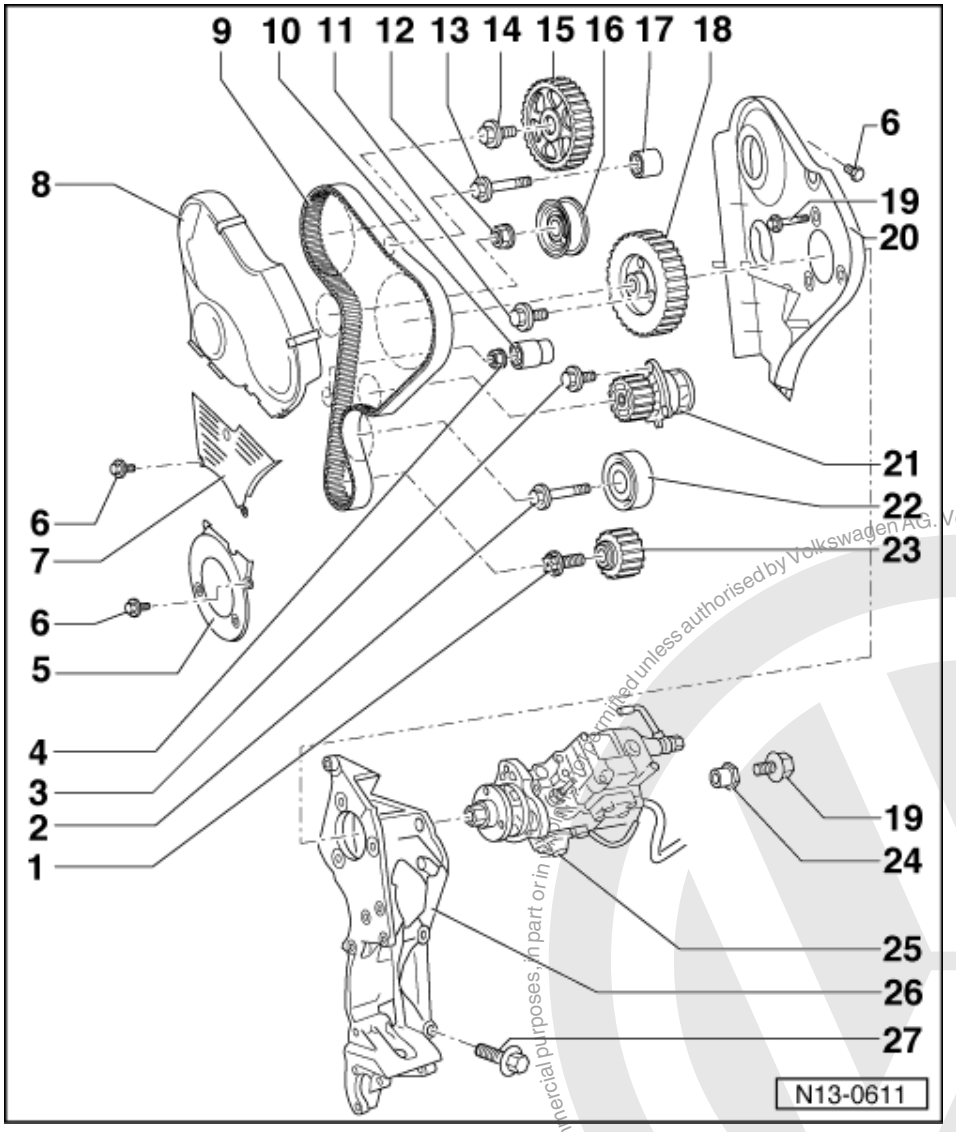

Part II

1 120 Nm + 1/4 turn (90 °) further
- Renew
- Counter-hold with 3415 to loosen and tighten

satelettronica
Protected by copyright. Copying for private or commercial purposes, in part or in whole, is not permitted unless authorised by Volkswagen AG. Volkswagen AG does not guarantee or accept any liability with respect to the correctness of information in this document. Copyright by Volkswagen AG.

- Do not additionally oil or grease the threads and shoulder
- The quarter turn further can be done in several stages.

2 40 Nm + 1/4 turn (90 °) further
- Renew

3 15 Nm

4 23 Nm

5 Toothed belt guard - lower part

6 10 Nm

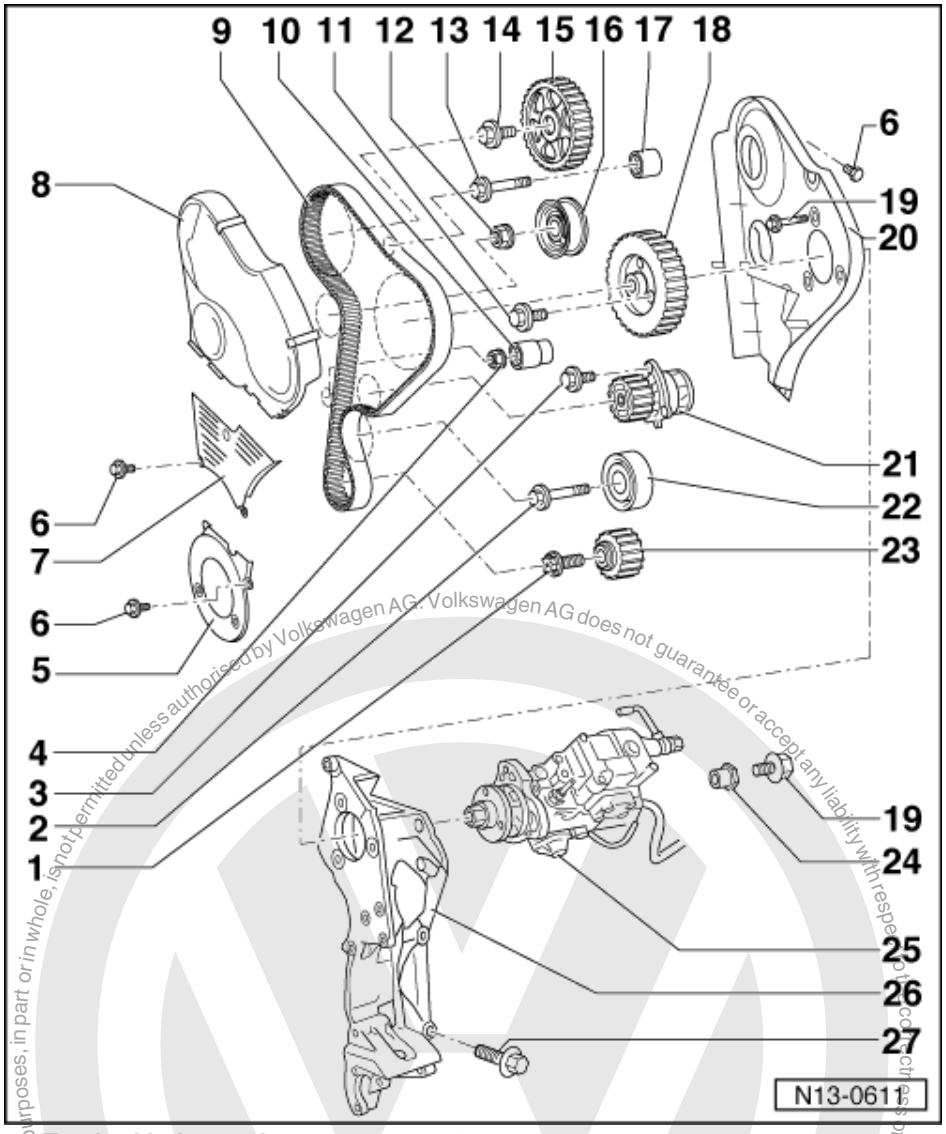

7 Toothed belt guard - centre part

8 Toothed belt guard - upper part

9 Toothed belt
- Mark D.O.R. before removing
- Check for wear
- Do not kink
- Removing, installing and tensioning => Page 60

10 Idler wheel
- Only engine codes AGR, ALH, ASV

11 Injection pump sprocket securing bolts
- Take note of different types and torque settings =>Fig. 1

12 20 Nm

satelettronica

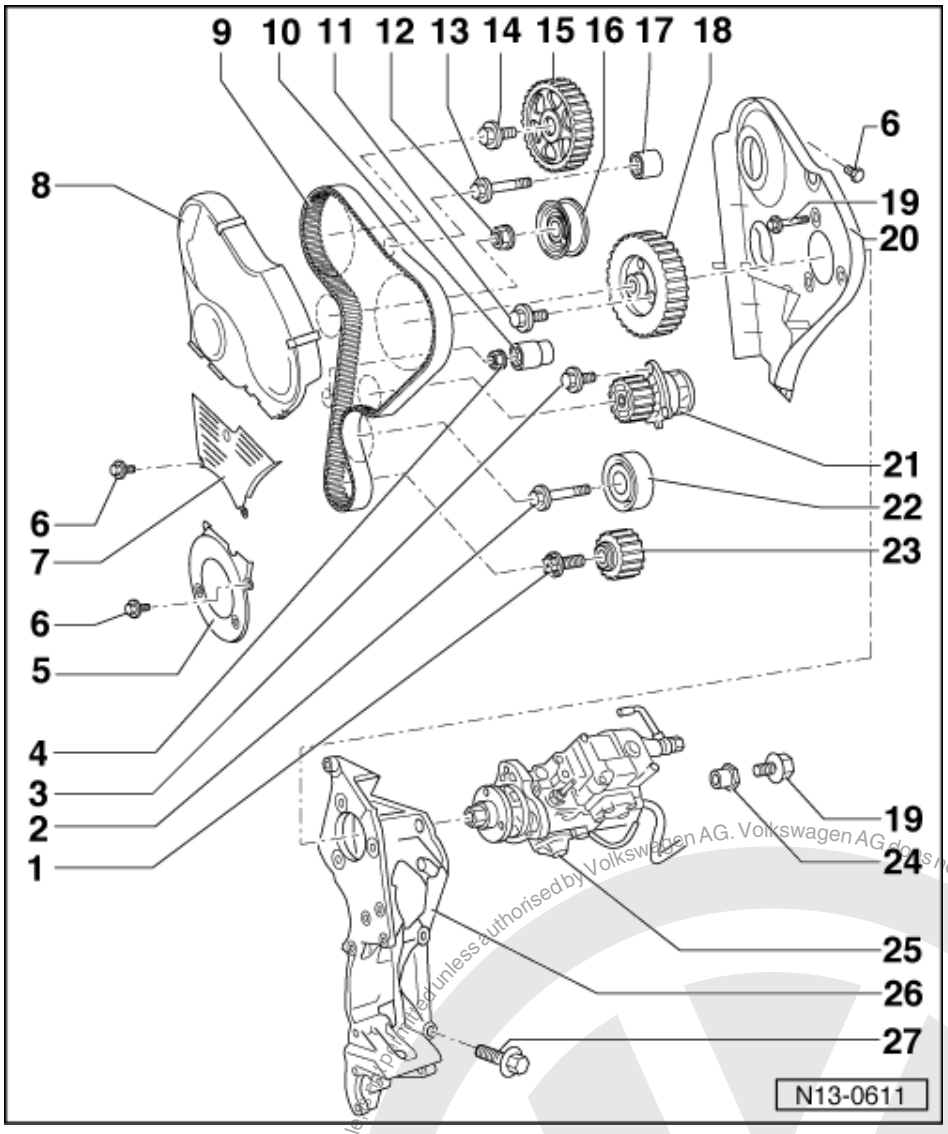

13 23 Nm
14 45 Nm
15 Camshaft sprocket
- Pull off with puller T40001

16 Tensioning roller
- Checking semi-automatic toothed belt tensioning roller => Page 66

17 Idler wheel
18 Injection pump sprocket
- Two part
- Take note of different types (Part No.) =>Fig. 1

19 30 Nm
20 Rear toothed belt guard

Protected by copyright. Copying for private or commercial purposes, in part or in whole, is not permitted unless authorised by Volkswagen AG. Volkswagen AG does not guarantee or accept any liability with respect to the correctness of information in this document. Copyright by Volkswagen AG.
satelettronica

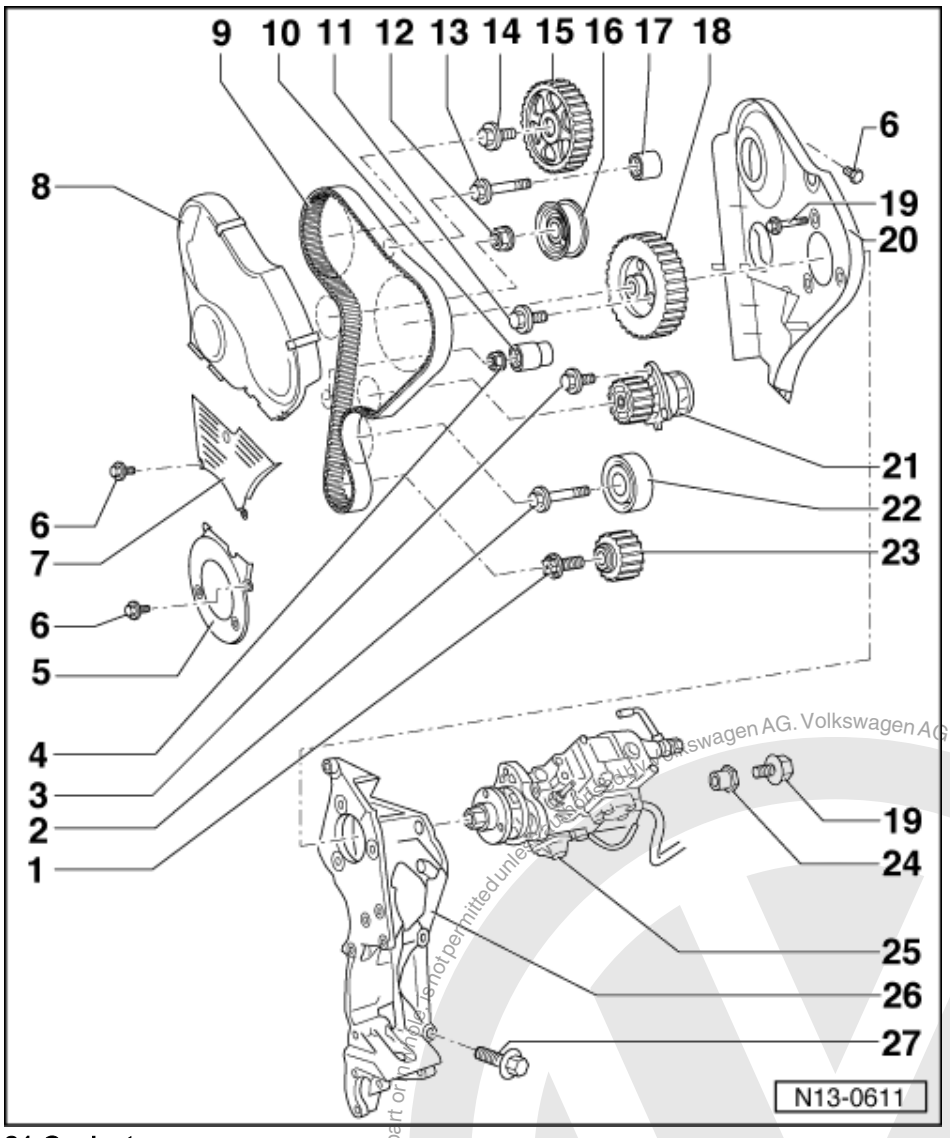

21 Coolant pump

- Check for ease of movement
- Note installation position
- Removing and installing
  => Page 120

22 Idler wheel

- Remove to remove coolant pump
- Removing and installing:
  => Page 120 , Removing and installing coolant pump

23 Crankshaft toothed belt sprocket

24 Bush

25 Injection pump

- Removing and installing:

=> Repair group 23; Diesel direct injection system; Removing and installing injection pump Diesel direct injection system Removing and installing injection pump

satelettronica

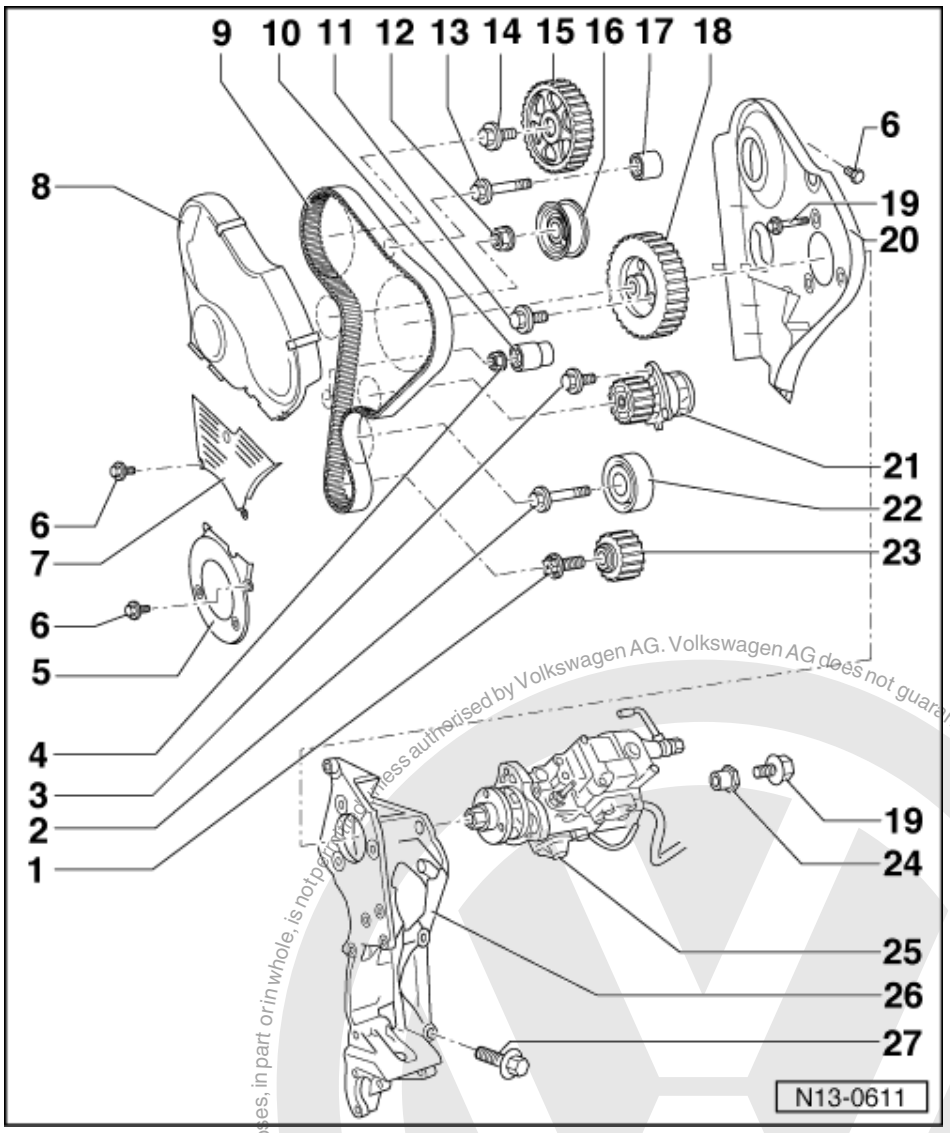

26 Compact bracket

- For injection pump, alternator and vane pump for power assisted steering
- For vehicles without air conditioner
- Removing and installing compact bracket on vehicles with air conditioner:

=> Heater, air conditioner; Repair group 87; Removing and installing compressor bracket Removing and installing compressor bracket

27 45 Nm

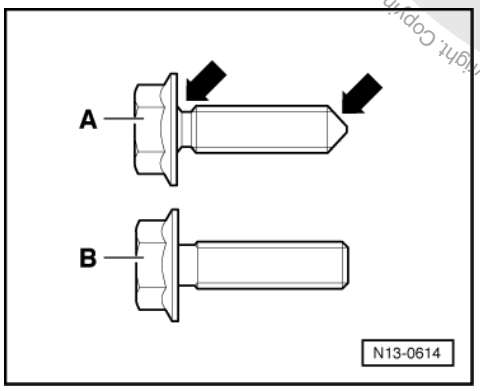

Protected by copyright. Copying for private or commercial purposes, in part or in whole, is not permitted unless authorised by Volkswagen AG. Volkswagen AG does not guarantee or accept any liability with respect to the correctness of information in this document. Copyright by Volkswagen AG.
satelettronica

-> Fig.1 Types of injection pump sprocket securing bolts

Type -A-: Securing bolts with chamfer on shaft and with pointed end -arrows-

- Part number of injection pump sprocket:
  038 130 111 A
- Torque setting of securing bolts:
  20 Nm + 1/4 turn (90°)
- Renew securing bolts

Note:

The securing bolt -A- is a stretch bolt and must always be replaced.

Type -B-: Securing bolts without chamfer on shaft and without pointed end

- Part No. of injection pump sprocket:
  038 130 111 B
- Torque setting of securing bolts:
  25 Nm
- Securing bolts need not be renewed

1.2 - Removing and installing ribbed belt

Work sequence

- Remove noise insulation tray:
- Mark ribbed belt direction of rotation.

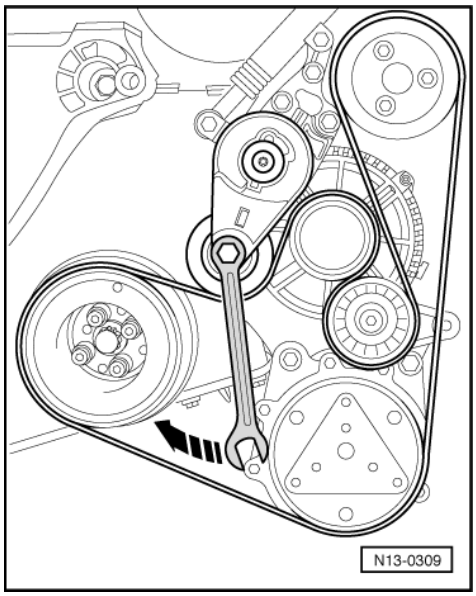

- -> Swing tensioning roller in direction of arrow using open jaw spanner 16 mm A/F on tensioning lever.
- Remove or fit the ribbed belt.

Notes:

- On vehicles without air conditioner remove ribbed belt from alternator first and fit on alternator last when installing.

Protected by copyright. Copying for private or commercial purposes, in part or in whole, is not permitted unless authorised by Volkswagen AG. Volkswagen AG does not guarantee or accept any liability with respect to the correctness of information in this document. Copyright by Volkswagen AG.
satelettronica

- On vehicles with air conditioner remove ribbed belt from idler roller first and fit on idler roller last when installing.

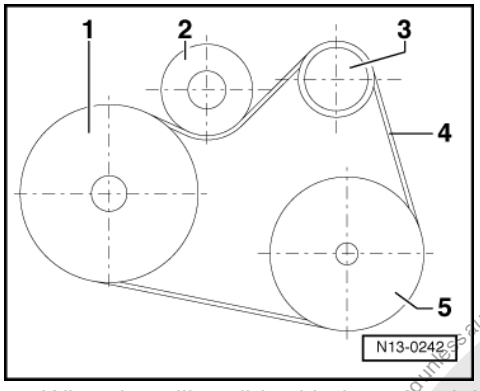

- When installing ribbed belt ensure it is correctly seated on the belt pulley.

Ribbed belt routing

-> Belt drive without air conditioner compressor

1 - Vibration damper/belt pulley
2 - Tensioning roller
3 - Pulley - Alternator
4 - Ribbed belt
5 - Pulley - P.A.S. vane pump

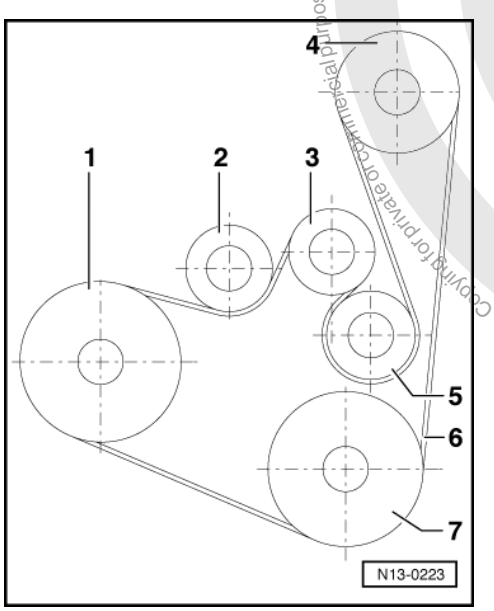

-> Belt drive with air conditioner compressor

1 - Vibration damper/belt pulley
2 - Tensioning roller
3 - Pulley - alternator
4 - Pulley - P.A.S. vane pump
5 - Idler wheel
6 - Ribbed belt
7 - Pulley - air conditioner compressor

Protected by copyright. Copying for private or commercial purposes, in part or in whole, is not permitted unless authorised by Volkswagen AG. Volkswagen AG does not guarantee or accept any liability with respect to the correctness of information in this document. Copyright by Volkswagen AG.
satelettronica

2 - Removing and installing sealing flange and pressure plate/flywheel/drive plate

2.1 - Removing and installing sealing flange and pressure plate/flywheel/drive plate

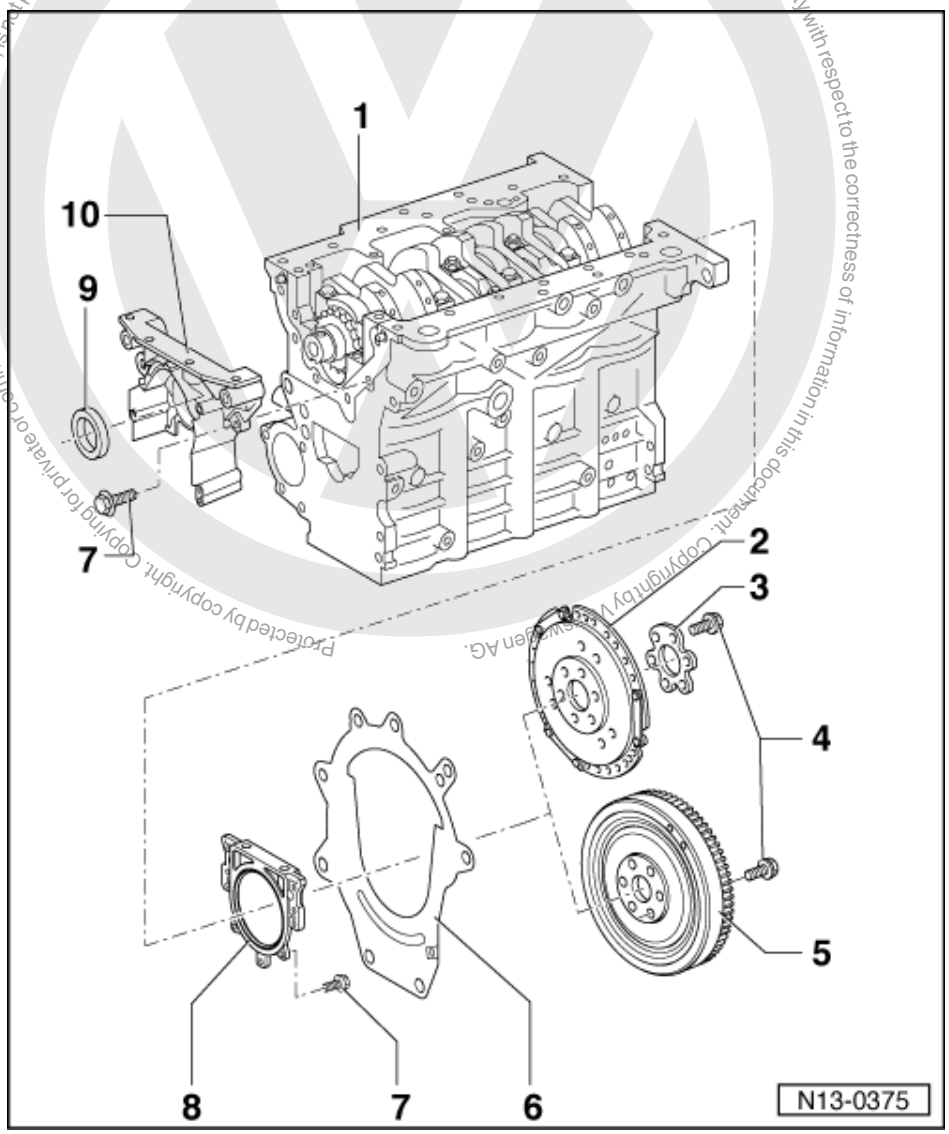

Note:

For repairs to the clutch:

Engine codes AGR, ALH, ASV

=> 5-Speed manual gearbox 02J; Repair group 30; Servicing clutch Servicing clutch

Engine codes AGP, AQM, AYQ

=> 5-Speed manual gearbox 02K; Repair group 30; Servicing clutch Servicing clutch

satelettronica

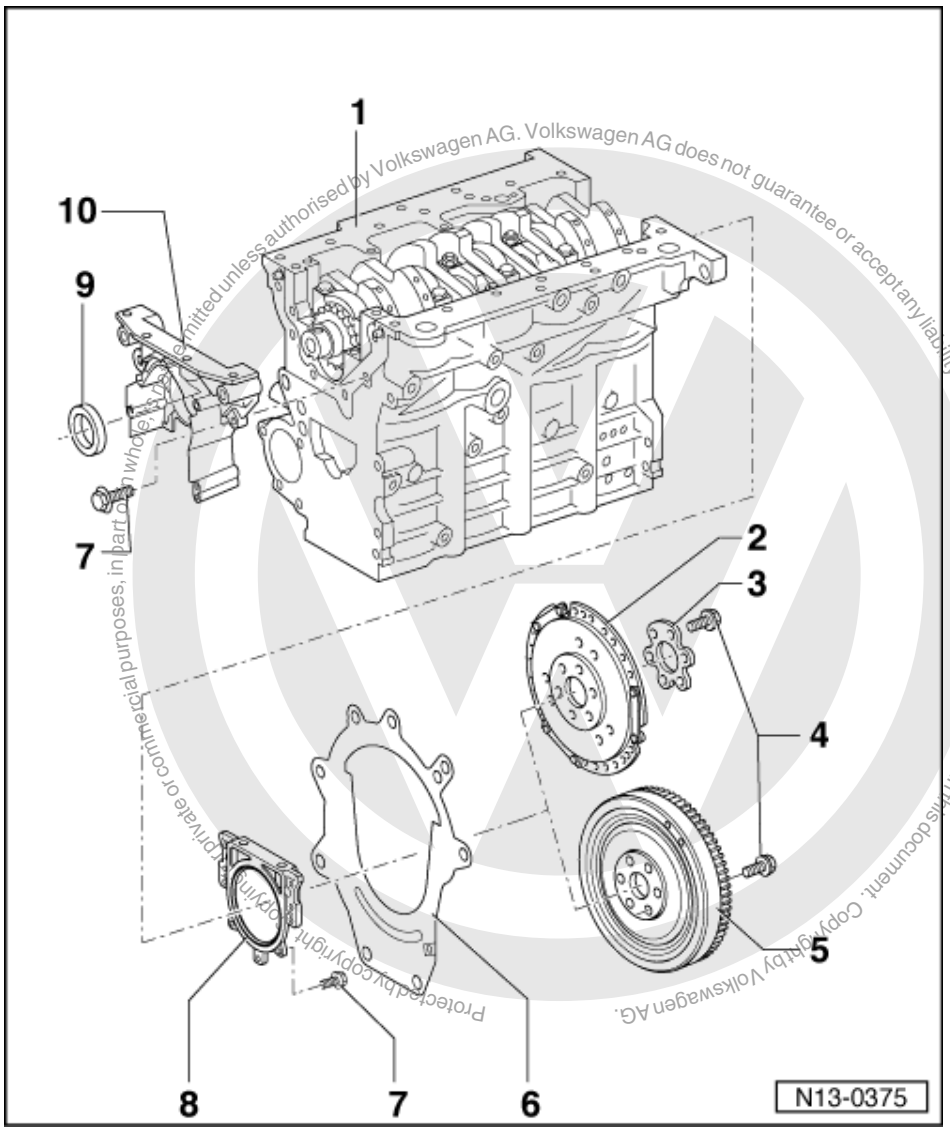

Protected by copyright. Copying for private or commercial purposes, in part or in whole, is not permitted unless authorised by Volkswagen AG. Volkswagen AG does not guarantee or accept any liability with respect to the correctness of information in this document. Copyright by Volkswagen AG.

1 Cylinder block
2 Pressure plate/drive plate
- Engine codes AGP, AQM, AYQ
- Removing and installing pressure plate =>Fig. 1

3 Plate
- Observe fitting position

4 60 Nm + 1/4 turn (90 °) further
5 Flywheel
- Only engine codes AGR, ALH, ASV
- To remove and install flywheel counter-hold with 3067
- Renew

satelettronica

Protected by copyright. Copying for private or commercial purposes, in part or in whole, is not permitted unless authorised by Volkswagen AG. Volkswagen AG does not guarantee or accept any liability with respect to the correctness of information in this document. Copyright by Volkswagen AG.

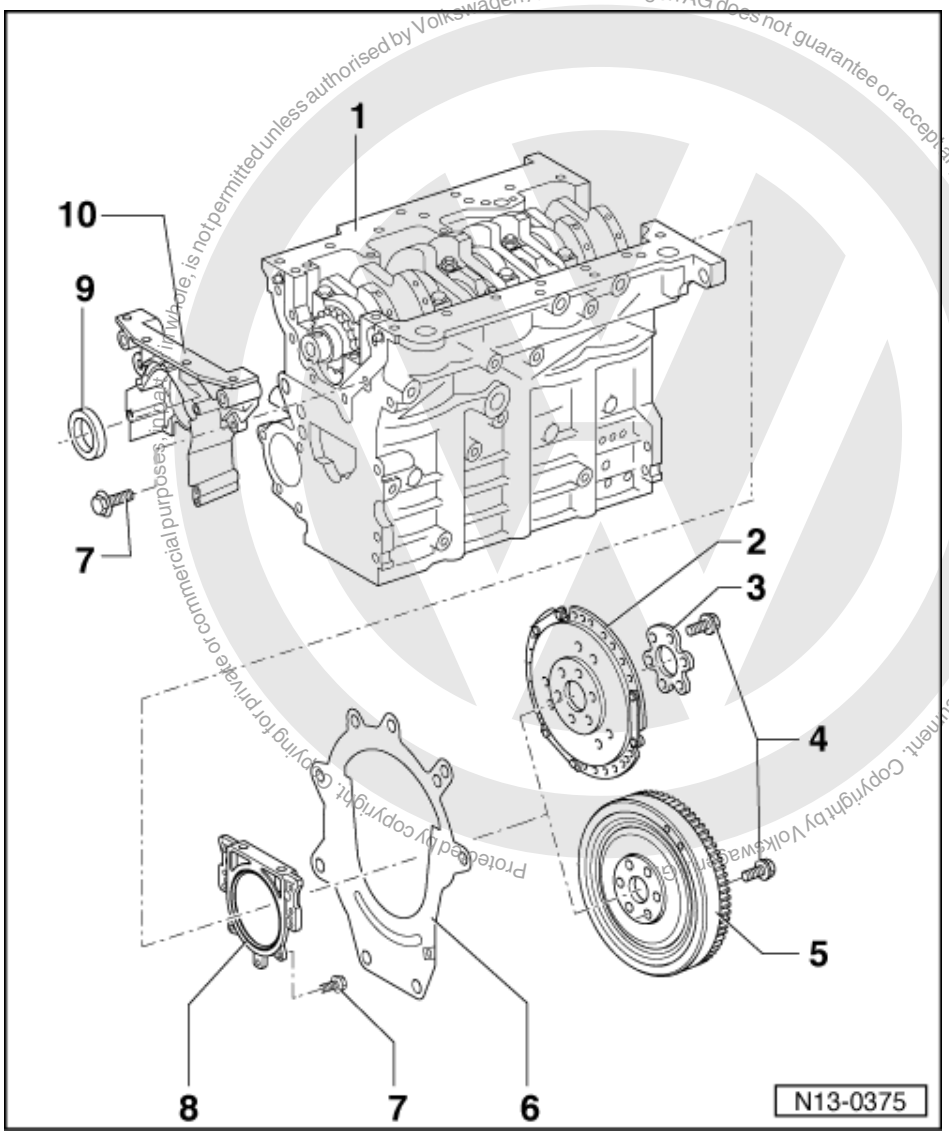

6 Intermediate plate
- Must be located on dowel sleeves
- Do not damage/bend when assembling

7 15 Nm

satelettronica

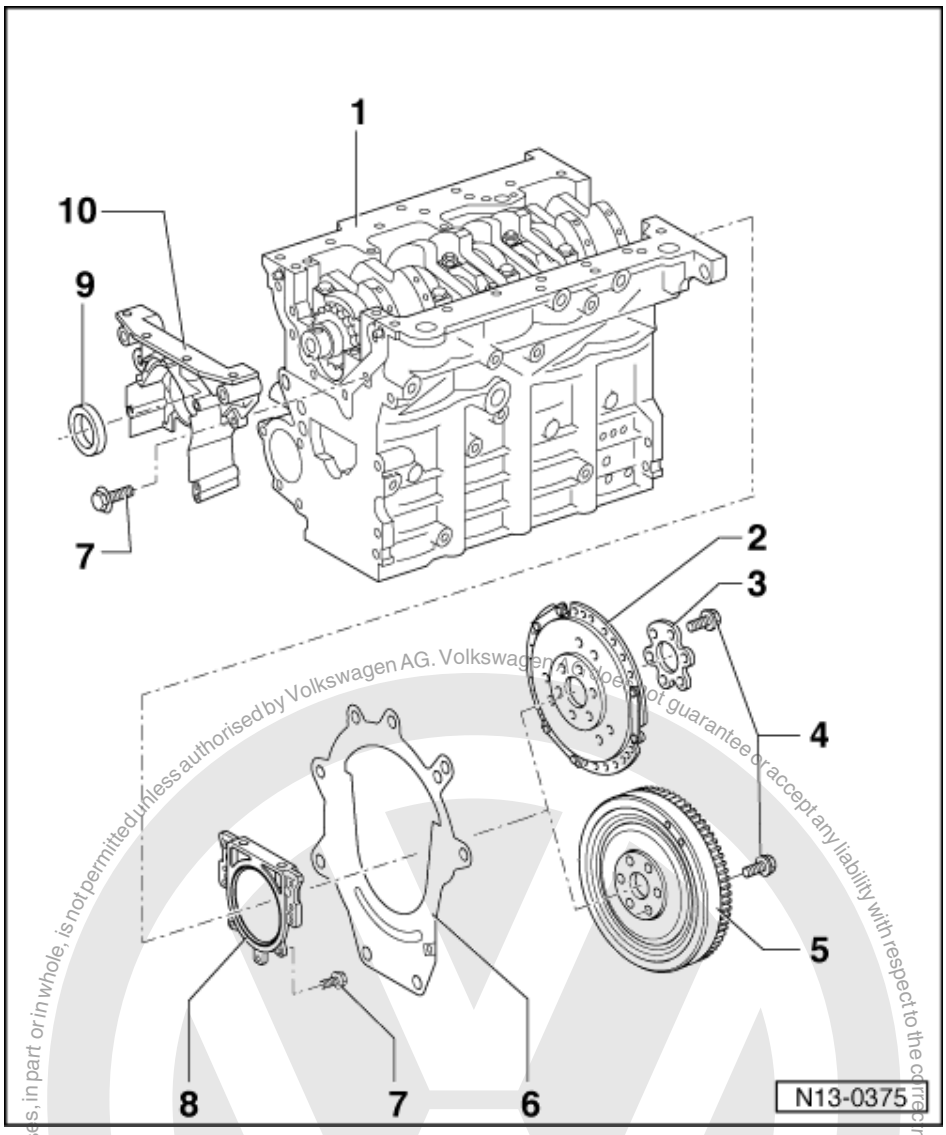

8 Sealing flange with oil seal

- Note differing versions
- Only renew complete
- Lightly oil sealing lip of oil seal
- Sealing flange with PTFE oil seal
- Identification: no inner coil spring
- Only renew complete
- Do not additionally oil or grease the oil seal sealing lip
- Before installing, remove oil remains from crankshaft journal with a clean cloth
- Use protective sleeve supplied when installing
- Remove protective sleeve first after sealing flange has been slid onto crankshaft journal

Protected by copyright. Copyright by Volkswagen AG.
Copyright by Volkswagen AG. Volkswagen AG does not guarantee or accept any liability with respect to the correctness of information in this document. Copying for private or commercial purposes, in part or in whole, is not permitted unless authorised by Volkswagen AG.
satelettronica

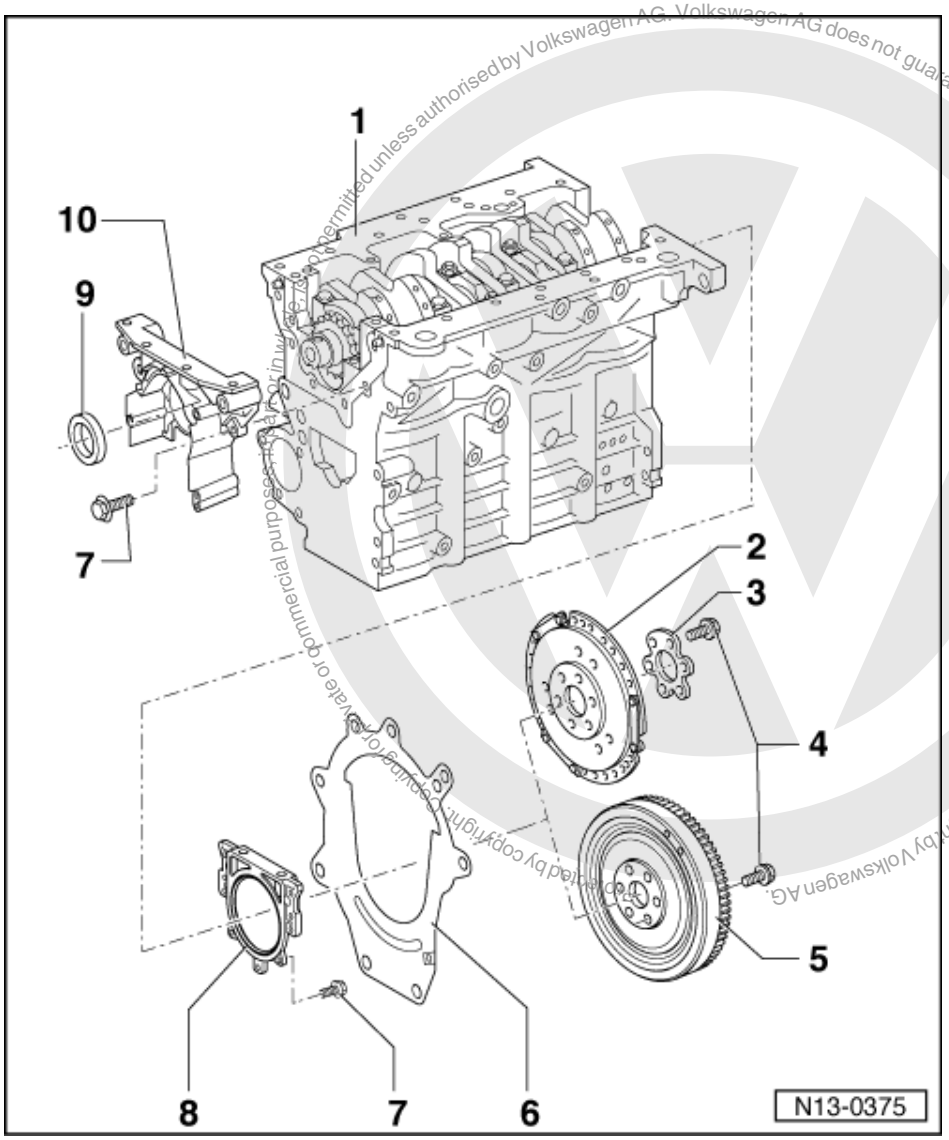

9 Oil seal

- Note differing versions
- Sealing flange with PTFE oil seal without inner coil spring
- Renewing => Page 32

10 Front sealing flange

- Must be located on dowel sleeves
- Removing and installing
  => Page 36

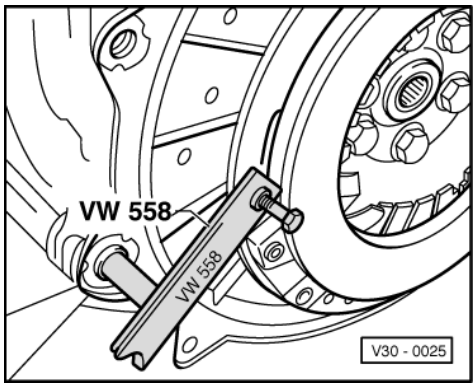

satelettronica

-> Fig.1 Removing and installing pressure plate

Protected by copyright. Copying for private or commercial purposes, in part or in whole, is not permitted unless authorised by Volkswagen AG. Volkswagen AG does not guarantee or accept any liability with respect to the correctness of information in this document. Copyright by Volkswagen AG.

2.2 - Renewing crankshaft oil seal -pulley end

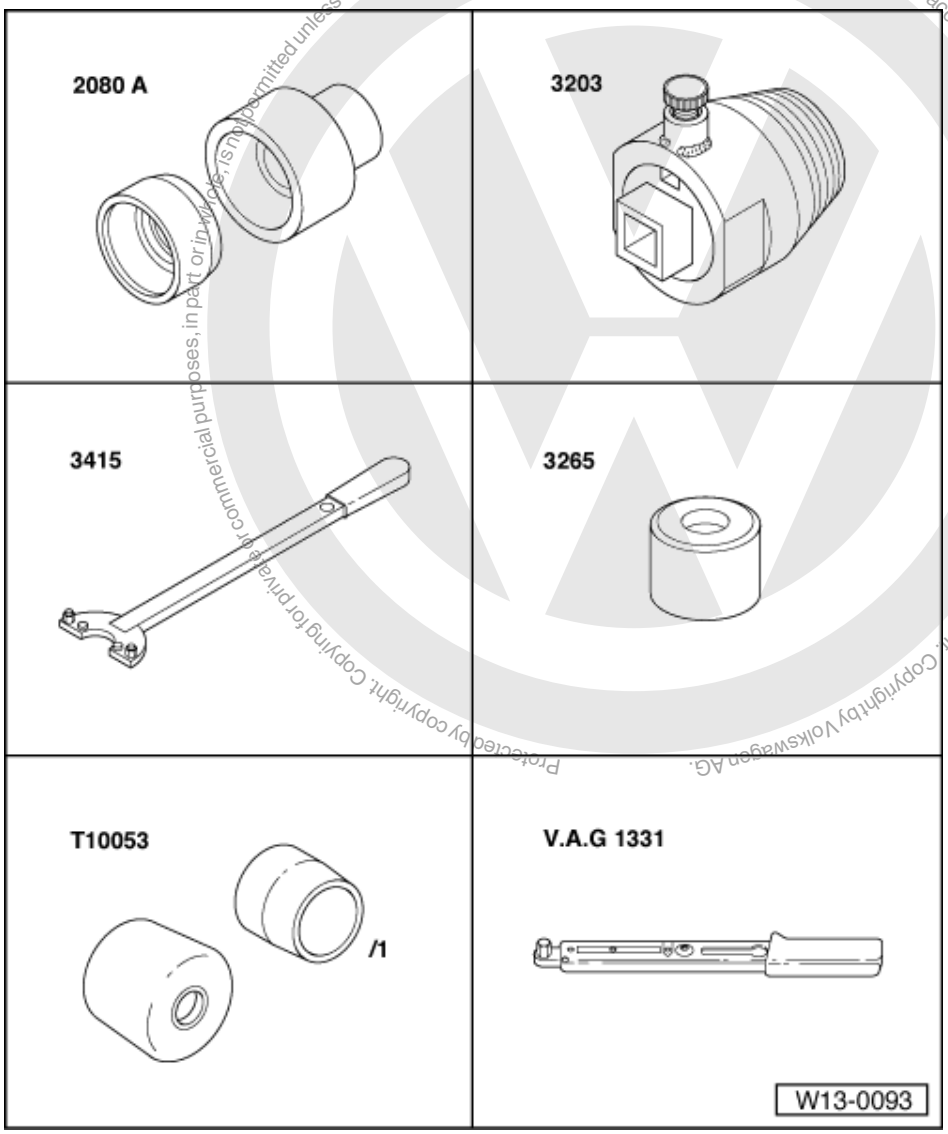

Special tools, workshop equipment, test and measuring appliances and auxiliary items required

- 2080 A Fitting sleeve
- 3203 Oil seal extractor
- 3415 Counter-hold tool
- 3265 Fitting sleeve
- T10053 Assembly tool
  (for PTFE oil seal)
- V.A.G 1331 Torque wrench (5...50 Nm)

satelettronica

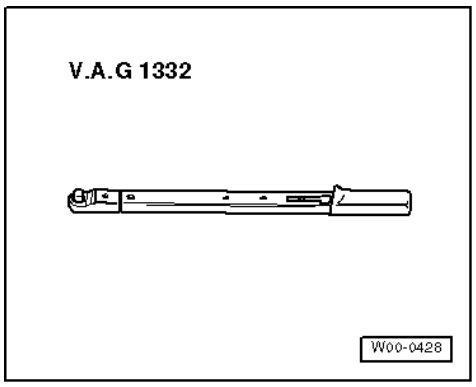

- -> V.A.G 1332 Torque wrench (40...200 Nm)

Removing

- Remove ribbed belt => Page 25 .
- Remove toothed belt => Page 60 .

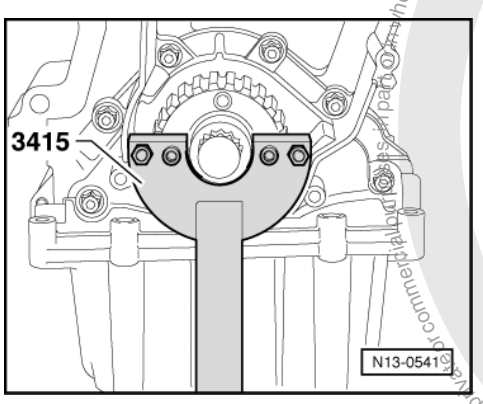

- -> Remove crankshaft toothed belt sprocket. To do this, counter-hold sprocket with 3415.
- To guide seal extractor, screw centre bolt into crankshaft onto stop by hand.

- Unscrew inner part of the oil seal extractor 3203 two turns (approx. 3 mm) out of the outer part and lock with knurled screw.

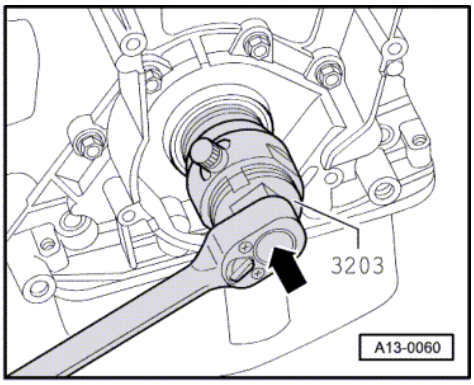

- -> Lubricate threaded head of oil seal extractor, place it in position and exerting firm pressure screw it as far as possible into oil seal.
- Loosen knurled screw and turn inner part against crankshaft until the oil seal is pulled out.

Installing

Note:

Gradual introduction of PTFE oil seals (recognised by the fact that they have no inner circular spring and the lip is wider). The lip of this seal must not be smeared with oil or grease. An old-design radial seal (with inner

Protected by copyright. Copying for private or commercial purposes, in part or in whole, is not permitted unless authorised by Volkswagen AG. Volkswagen AG does not guarantee or accept any liability with respect to the correctness of information in this document. Copyright by Volkswagen AG.
satelettronica

circular spring) can be replaced by a PTFE seal. However, a PTFE seal cannot be replaced by an old-design radial seal.

Installing PTFE oil seal
=> Page 34 .

- Lightly oil sealing lip of oil seal.

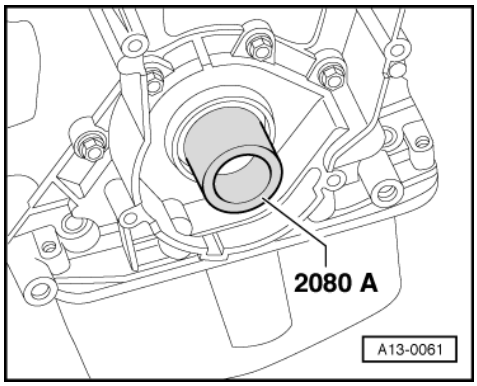

- -> Fit guide sleeve from 2080 A onto crankshaft journal.
- Slide oil seal over guide sleeve.

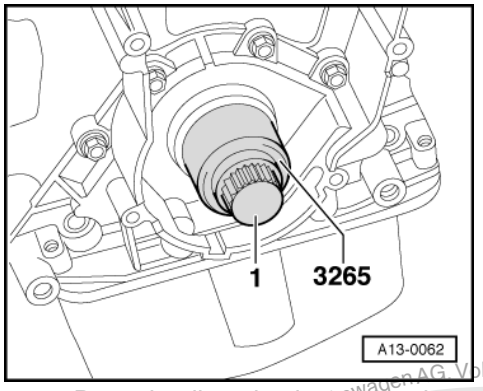

- -> Press in oil seal using press sleeve from 3265 onto stop with centre bolt -1- approx. 2-3 mm into sealing flange.
- Install and tension toothed belt => Page 60 .

Installing PTFE oil seal

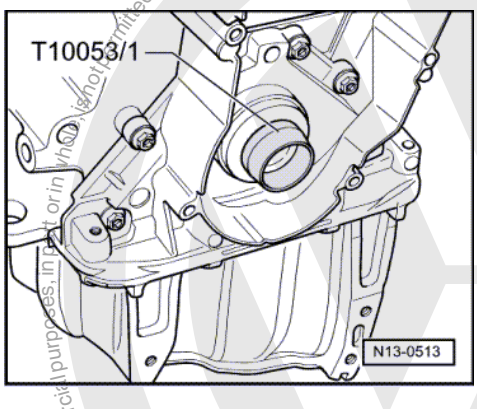

Note:

The oil seal sealing lip must not be additionally oiled or greased.

- Before installing, remove oil remains from crankshaft journal with a clean cloth.
- -> Fit guide sleeve T10053/1 onto crankshaft journal.

satelettronica

- Slide oil seal over guide sleeve onto crankshaft journal.

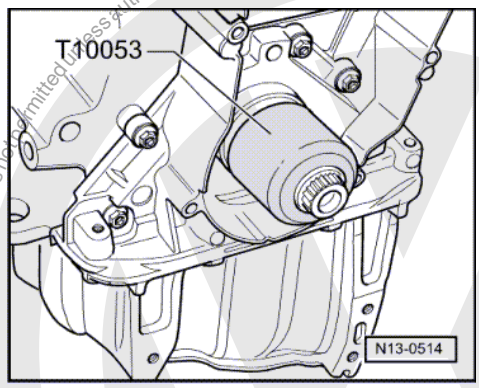

- -> Press in oil seal onto stop using press sleeve T10053 and bolt T10053/2 (M16 x 1.5 x 60).
- Install and tension toothed belt => Page 60 .

2.3 - Removing and installing front sealing flange

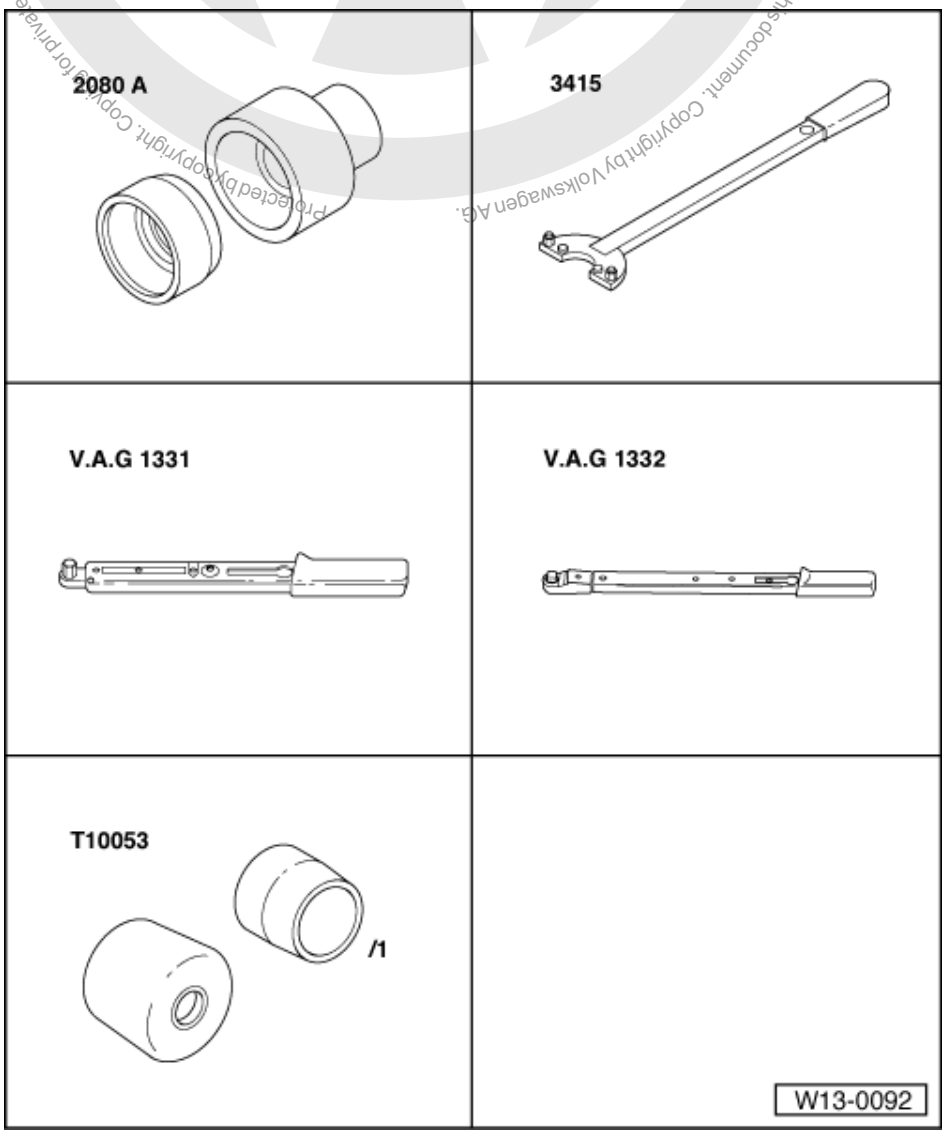

satelettronica

Special tools, workshop equipment, test and measuring appliances and auxiliary items required

- 2080 A Fitting sleeve
- 3415 Counter-hold tool
- V.A.G 1331 Torque wrench (5...50 Nm)
- V.A.G 1332 (40...200 Nm) Torque wrench
- T10053 Assembly tool
  (for PTFE oil seal)
- Hand drilling machine with plastic brush insert
- D176404 A2 Silicone sealant
- Flat scraper

Removing

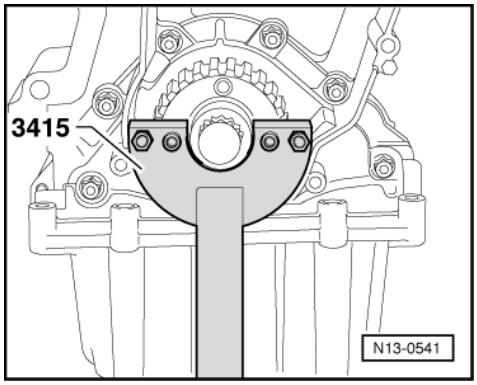

- Remove ribbed belt => Page 25 .
- Remove toothed belt => Page 60 .
- -> Remove crankshaft toothed belt sprocket. To do this, counter-hold sprocket with 3415.
- Drain engine oil.
- Remove sump => Page 102 .
- Unbolt front sealing flange.
- Take off sealing flange, release using light blows with a rubber headed hammer if necessary.

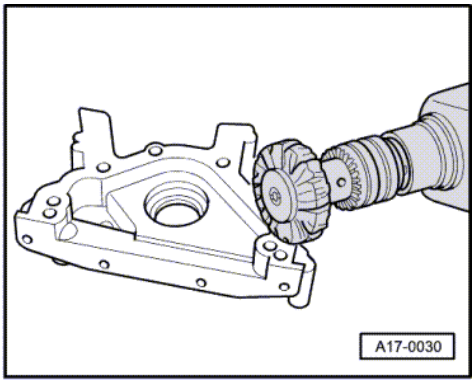

- Remove sealant residue on cylinder block with a flat scraper.
- Cover seal with a clean rag.
- -> Remove sealant remains on sealing flange with a rotating plastic brush (wear protective goggles).
- Clean sealing surface, must be free of oil and grease.

Installing

Notes:

- Note the use by date of the sealant.
- The sealing flange must be installed within 5 minutes of applying the silicone sealant.

Protected by copyright. Copyright by Volkswagen AG.
Copyright by Volkswagen AG. Volkswagen AG does not guarantee or accept any liability with respect to the correctness of information in this document.
Protected by copyright. Copying for private or commercial purposes, in part or in whole, is not permitted unless authorised by Volkswagen AG.
satelettronica

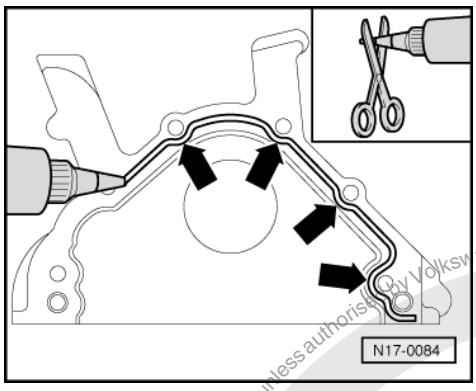

- -> Cut off tube nozzle at forward marking (nozzle approx. 3 mm ø).
- Apply silicone sealing compound, as shown, to clean sealing surface of the sealing flange. Sealing compound bead must be:
  - Thickness of sealant bead -arrows-: 2 ... 3 mm

Notes:

- The sealant bead must not be thicker, otherwise the excess sealant can get into the sump and block the strainer in the suction pipe to the oil pump and can also drip onto the sealing surface of the crankshaft radial seal.
- Cover the sealing surface of the oil seal with a clean cloth before applying the sealant.

- Fit sealing flange immediately and lightly tighten all bolts.

Note:

Use guide sleeve from 2080A to fit sealing flange with the oil seal already installed.

PTFE oil seal

Note:

Use guide sleeve T10053/1 to fit sealing flange with the oil seal already installed.

Continuation for all versions

- Tighten sealing flange securing bolts using alternate sequence.
  Tightening torque:15 Nm
- Remove excess sealant
- Install sump => Page 102 .

Note:

After installing, the sealant must be allowed to dry for approx. 30 minutes before engine oil is replenished.

Installing toothed belt and adjusting valve timing => Page 60 .

- Install ribbed belt => Page 25 .

Protected by copyright. Copying for private or commercial purposes, in part or in whole, is not permitted unless authorised by Volkswagen AG. Volkswagen AG does not guarantee or accept any liability with respect to the correctness of information in this document. Copyright by Volkswagen AG.
satelettronica

3 - Removing and installing crankshaft

3.1 - Removing and installing crankshaft

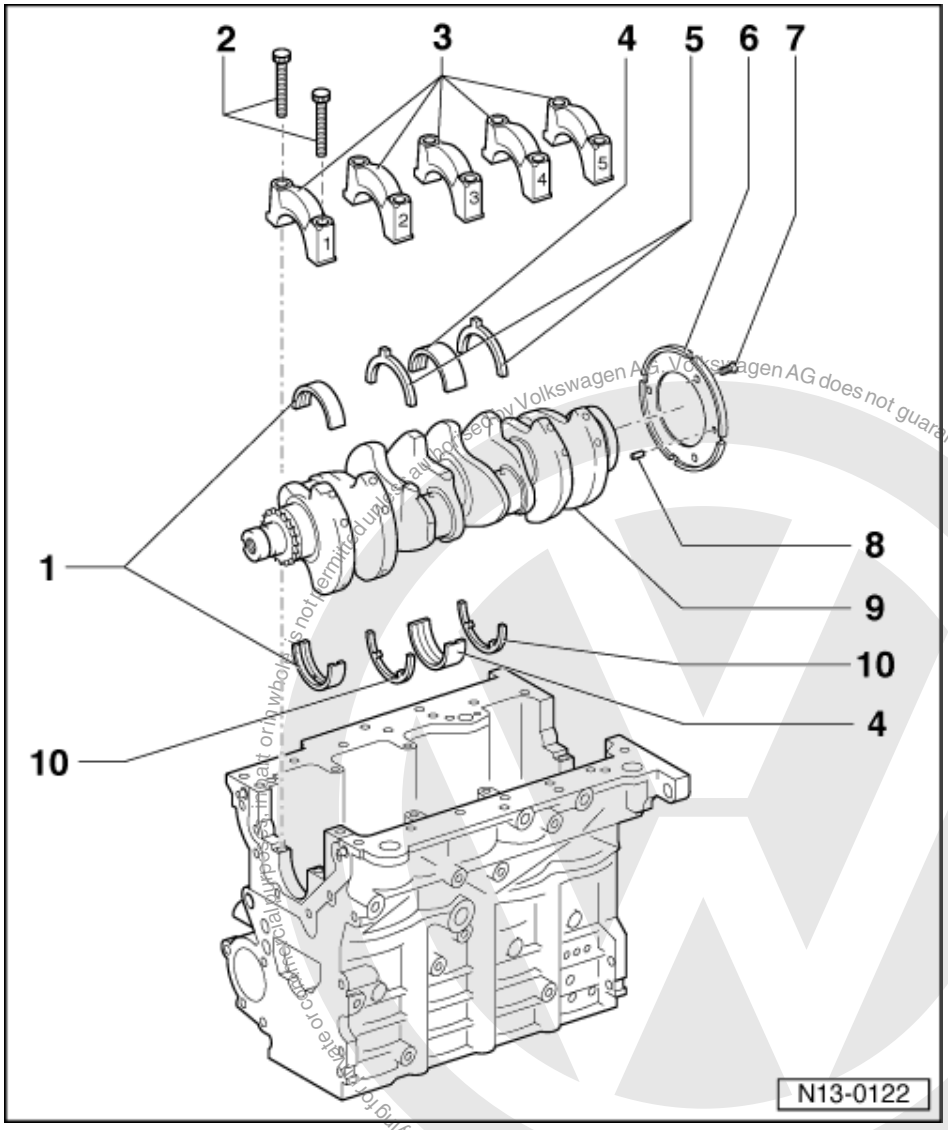

1 Bearing shells 1, 2, 4 and 5
- For bearing caps without oil groove
- For cylinder block with oil groove
- Do not interchange used bearing shells (mark)

2 65 Nm + 1/4turn (90 °) further
- Renew
- To measure radial clearance tighten to 65 Nm but not further

3 Bearing cap
- Bearing cap 1: Pulley end
- Bearing cap 3 with recesses for thrust washers
- Bearing shell retaining lugs (cylinder block/bearing cap) must be on the same side

Copyright by Volkswagen AG. Volkswagen AG does not guarantee or accept any liability with respect to the correctness of information in this document.
Reproduction or copying, in part or in whole, is not permitted unless authorised by Volkswagen AG.
satelettronica

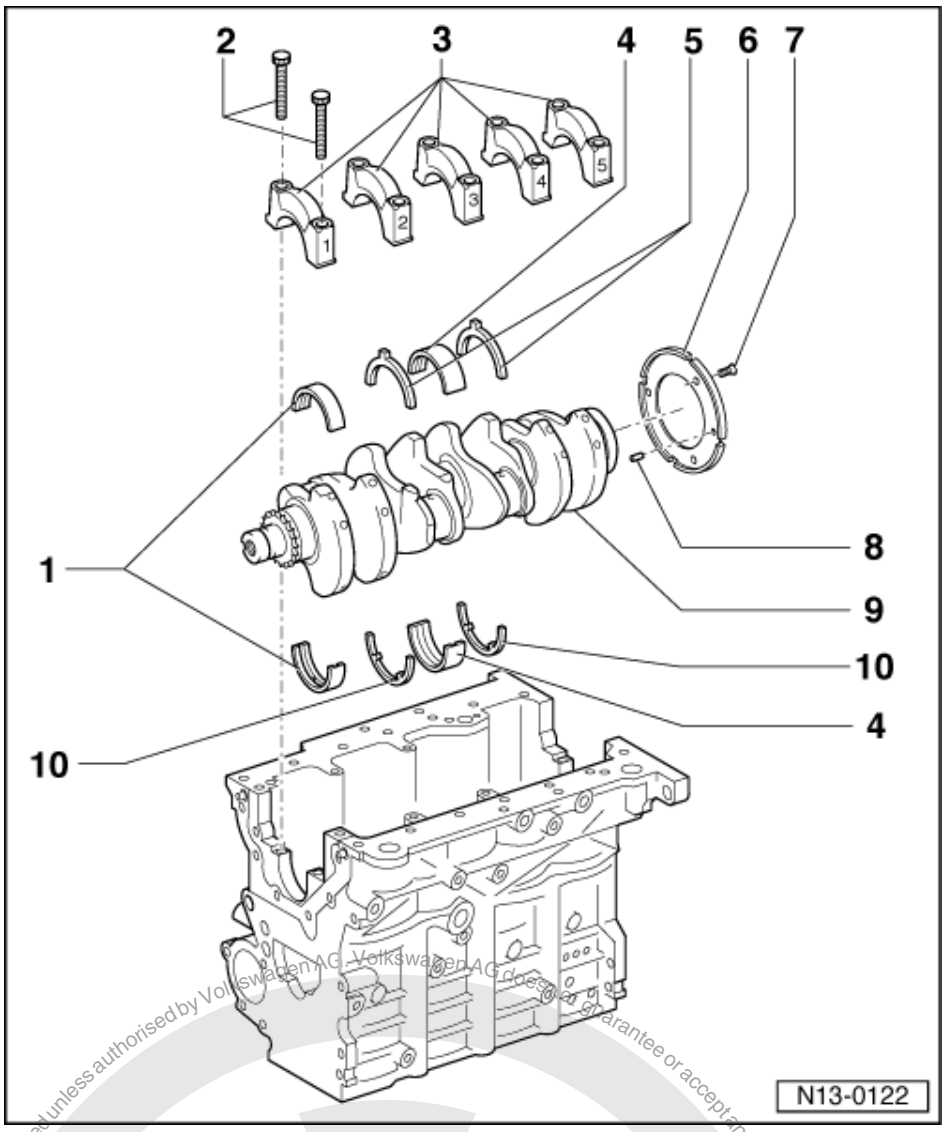

4 Bearing shell 3
- For bearing cap without oil groove
- For cylinder block with oil groove

5 Thrust washer
- For bearing cap 3
- Note fixing arrangement

6 Sender wheel
- For speed sender
- Renew if damaged

7 10 Nm + 1/4 turn (90 °) further
- Renew

8 Fitted pin
- Checking projection from crankshaft => Fig. 1

satelettronica
Protected by copyright. Copying for private or commercial purposes, in part or in whole, is not permitted unless authorised by Volkswagen AG. Volkswagen AG does not guarantee or accept any liability with respect to the correctness of information in this document. Copyright by Volkswagen AG.

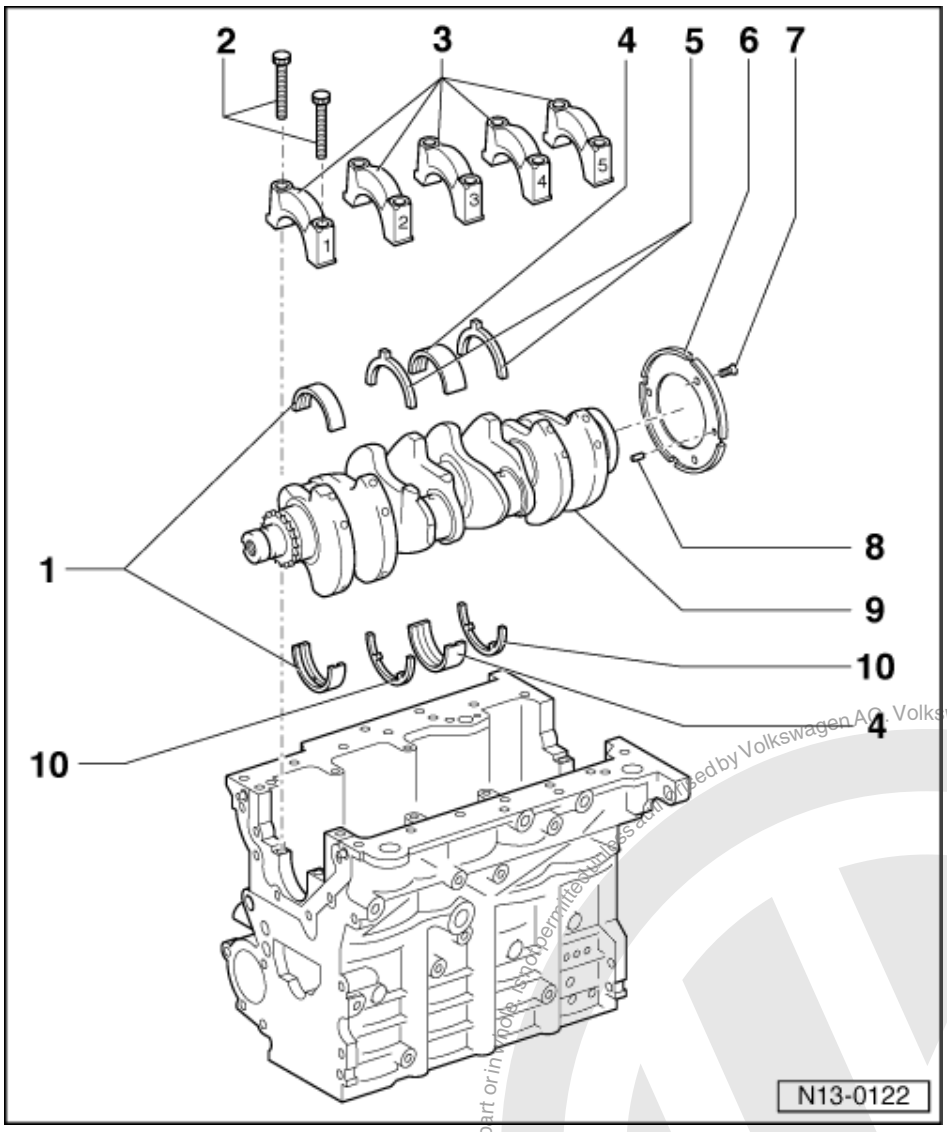

9 Crankshaft

- Axial clearance new: 0.07...0.17 mm
  Wear limit: 0.37 mm
- Check radial clearance with Plastigage
  New: 0.03...0.08 mm
  Wear limit: 0.17 mm
- Do not rotate the crankshaft when checking the radial clearance
- Crankshaft dimensions
  => Page 41

10 Thrust washer

- For cylinder block, bearing 3

Protected by copyright. Copying for private or commercial purposes, in part or in whole, is not permitted unless authorised by Volkswagen AG. Volkswagen AG does not guarantee or accept any liability with respect to the correctness of information in this document. Copyright by Volkswagen AG.
satelettronica

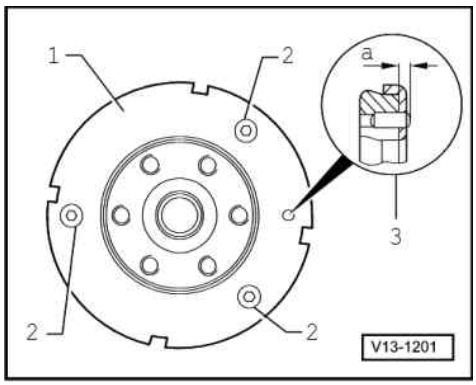

-> Fig. 1 Checking fitted pin projection out of crankshaft

Dowel pin projection -3- out of crankshaft
a =2.5...3.0 mm

3.2 - Crankshaft dimensions

(in mm)

Honing dimension	Main journal -ø	Conrod journal-ø
Basic dimension	-0.022 54.00 -0.042	-0.022 47.80 -0.042
1st undersize	-0.022 53.75 -0.042	-0.022 47.55 -0.042
2nd undersize	-0.022 53.50 -0.042	-0.022 47.30 -0.042
3rd undersize	-0.022 53.25 -0.042	-0.022 47.05 -0.042

Protected by copyright. Copying for private or commercial purposes, in part or in whole, is not permitted unless authorised by Volkswagen AG. Volkswagen AG does not guarantee or accept any liability with respect to the correctness of information in this document. Copyright by Volkswagen AG.
satelettronica

4 - Dismantling and assembling pistons and conrods

4.1 - Dismantling and assembling pistons and conrods

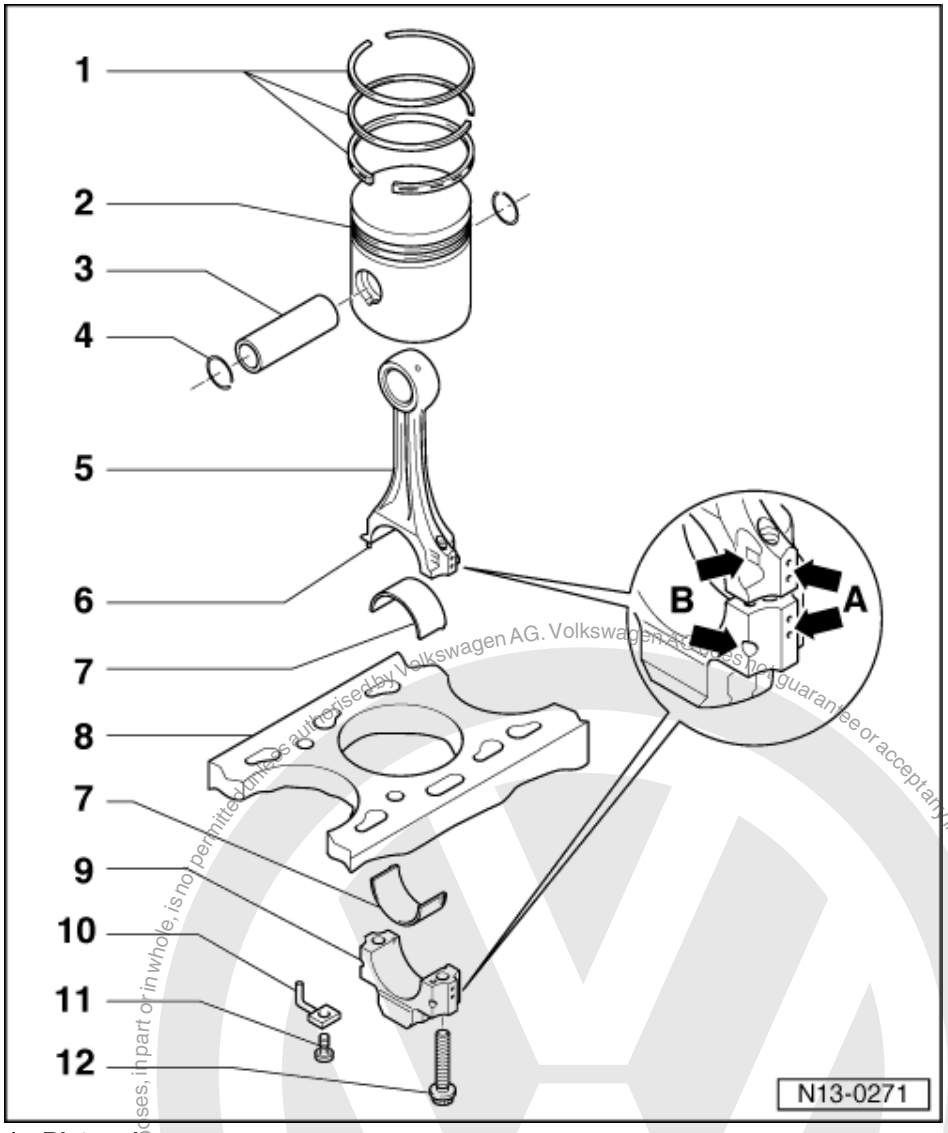

1 Piston ring
- Offset gaps by 120 °
- Remove and install with piston ring pliers
- "TOP" faces towards piston crown
- Checking ring gap=> Fig. 1
- Checking ring to groove clearance => Fig. 2

2 Piston
- With combustion chamber
- Mark installation position and cylinder number
- Mark installation position and allocation piston/cylinder => Fig. 4
- Arrow on piston crown points to pulley end
- Install using piston ring clamp
- Cracks on piston skirt, renew piston
- Checking piston projection at TDC =>Page 48

Protected by copyright. Copying for private or commercial purposes, in part or in whole, is not permitted unless authorised by Volkswagen AG. Volkswagen AG does not guarantee or accept any liability with respect to the correctness of information in this document. Copyright by Volkswagen AG.
satelettronica

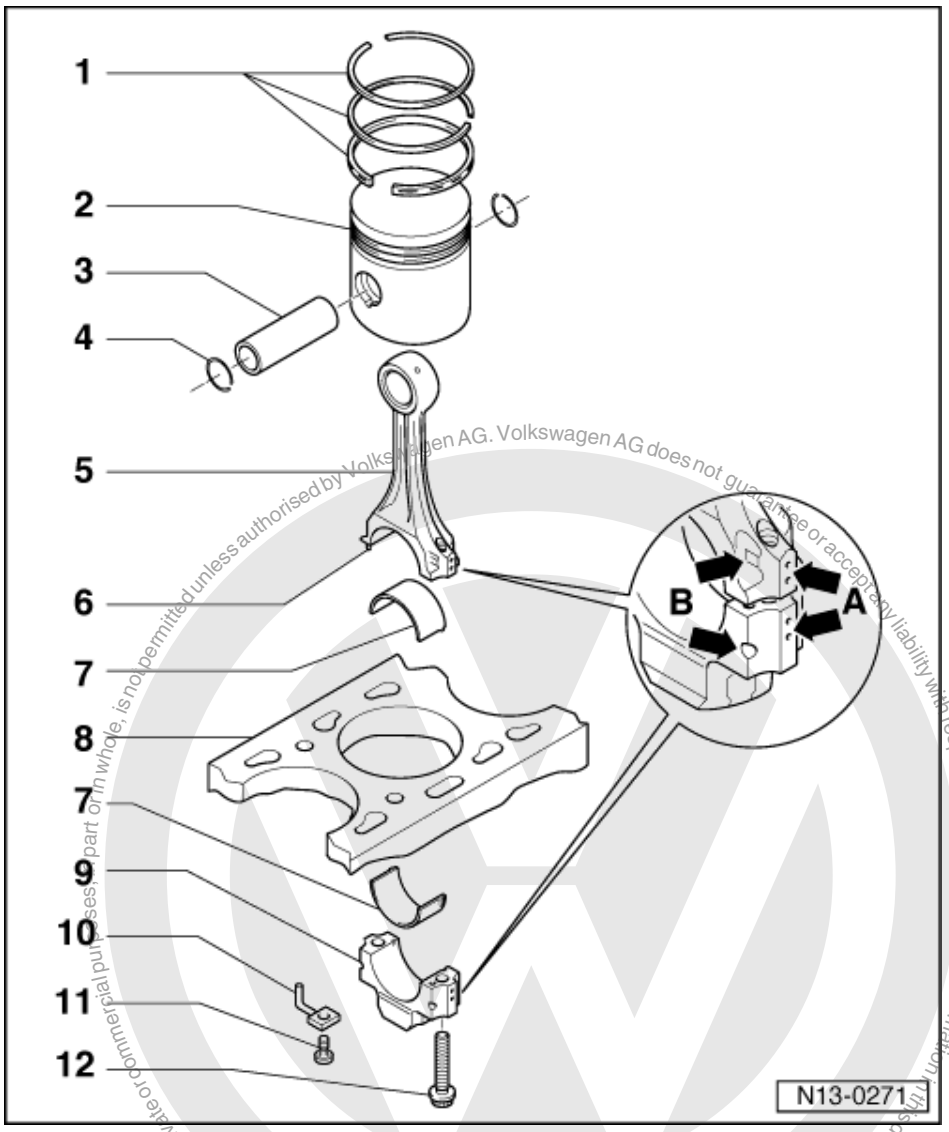

3 Piston pin
- If difficult to remove, heat piston to 60 °C
- Remove and install with VW 222a

4 Circlip

5 Conrod
- Only renew as a set
- Mark cylinder number -A-
- Installation position:
  Marking -B- faces towards pulley end

6 Fitted pin
- The fitted pin must seat securely in the conrod, not in the bearing cap

Protected by copyright. Copying for private or commercial purposes, in part or in whole, is not permitted unless authorised by Volkswagen AG. Volkswagen AG does not guarantee or accept any liability with respect to the correctness of information in this document. Copyright by Volkswagen AG.
satelettronica

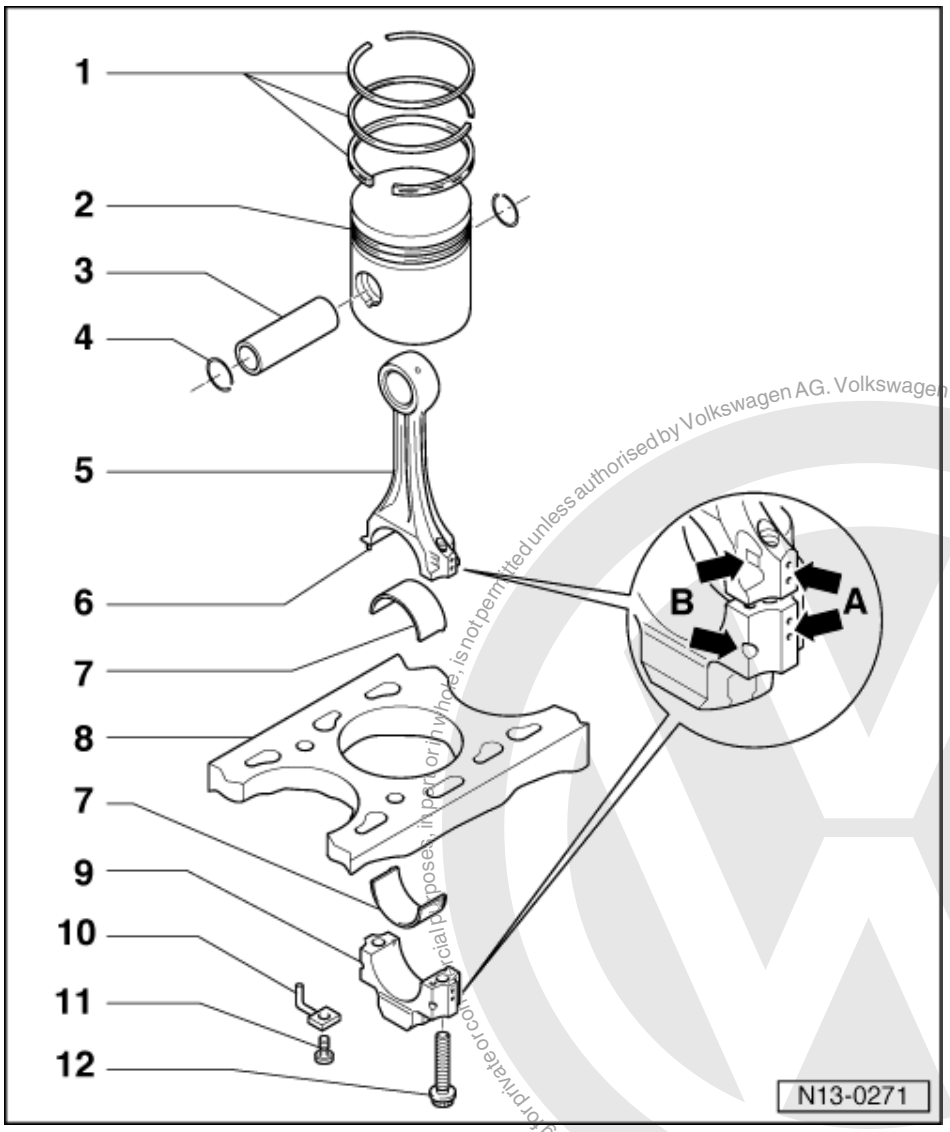

7 Bearing shell

- Take note of type:
  On engine code ASV, the upper bearing shell (towards piston) is made from a more durable material
  Identification:
  Black line on bearing surface in area of joint
- Note installation position
- Do not interchange used bearing shells
- Ensure retaining lugs fit tightly in recesses
- Axial clearance
  Wear limit: 0.37 mm
- Check radial clearance with Plastigage:
  Wear limit: 0.08 mm
  Do not rotate crankshaft when checking radial clearance

8 Cylinder block

- Checking cylinder bores
  =>Fig. 3
- Piston and cylinder dimensions
  =>Page 49

Protected by copyright. Copying for private or commercial purposes, in part or in whole, is not permitted unless authorised by Volkswagen AG. Volkswagen AG does not guarantee or accept any liability with respect to the correctness of information in this document. Copyright by Volkswagen AG.
satelettronica

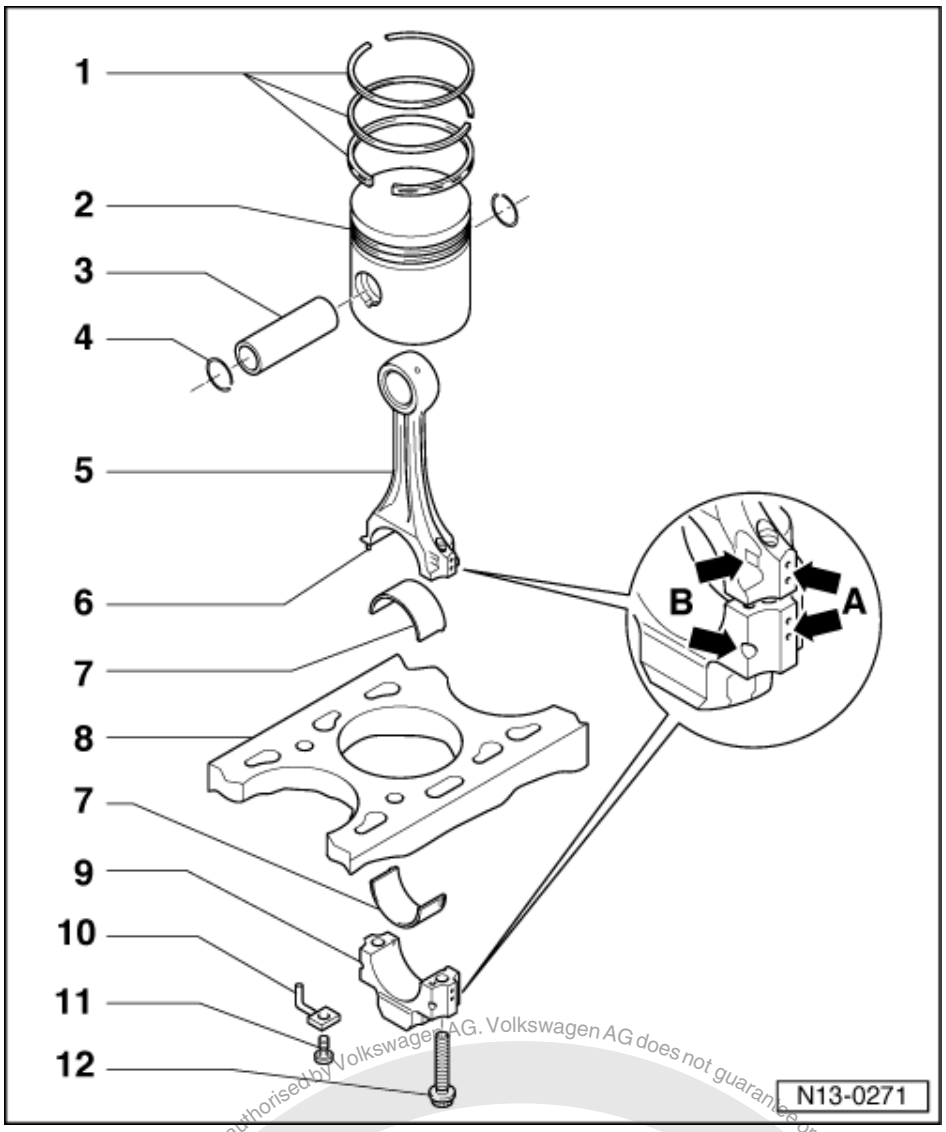

9 Conrod bearing cap
- Note installation position

10 Oil spray jet
- For piston cooling

11 25 Nm
- Insert without sealant

12 Conrod bolt, 30 Nm + 1/4 turn (90 °) further
- Renew
- Oil threads and contact surface
- To measure radial clearance use old bolts

Protected by copyright. Copying for private or commercial purposes, in part or in whole, is not permitted unless authorised by Volkswagen AG. Volkswagen AG does not guarantee or accept any liability with respect to the correctness of information in this document. Copyright by Volkswagen AG.
satelettronica

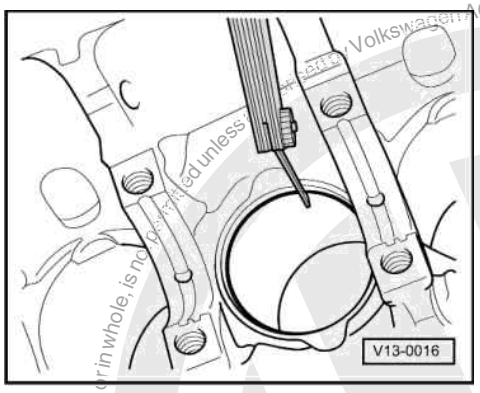

-> Fig. 1 Checking piston ring gap

- Push ring squarely from above down to approx. 15 mm from bottom end of cylinder.

Piston ring Dimensions in mm	New	Wear limit
1st compression ring	0.20...0.40	1.0
2nd compression ring	0.20...0.40	1.0
Oil scraper ring	0.25...0.50	1.0

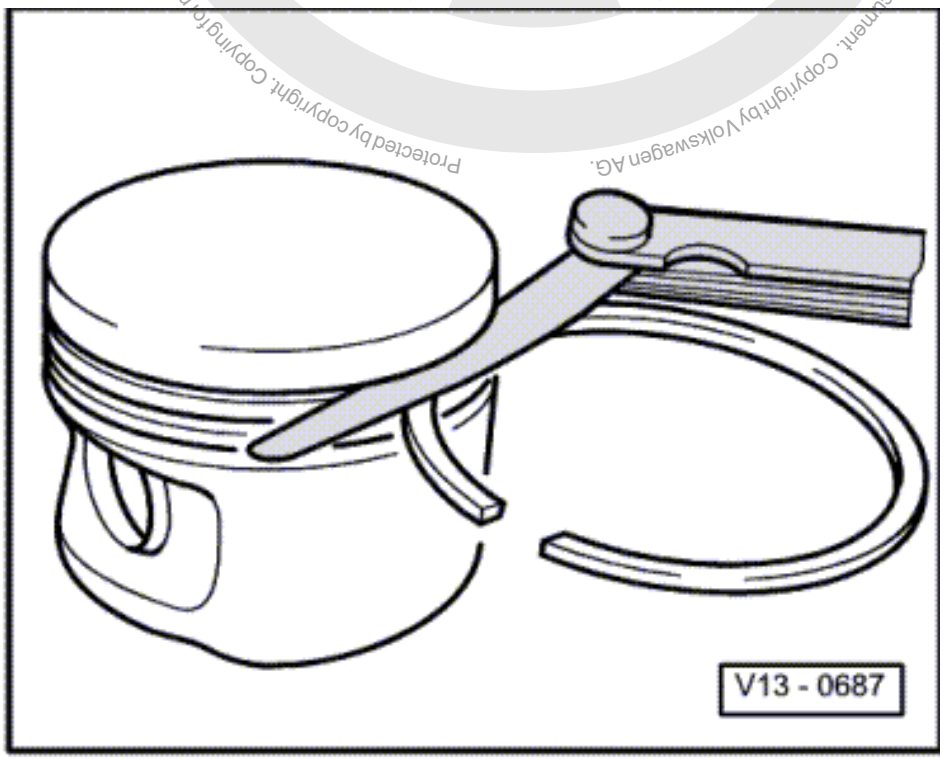

-> Fig. 2 Checking ring to groove clearance

Clean groove before check.

Piston ring Dimensions in mm	New	Wear limit
1st compression ring	0.06...0.09	0.25
2nd compression ring	0.05...0.08	0.25

Protected by copyright. Copyright by Volkswagen AG. Volkswagen AG does not guarantee or accept any liability with respect to the correctness of information in this document. Copying for private or commercial purposes, in part or in whole, is not permitted unless authorised by Volkswagen AG.
satelettronica

Piston ring Dimensions in mm	New	Wear limit
Oil scraper ring	0.03...0.06	0.15

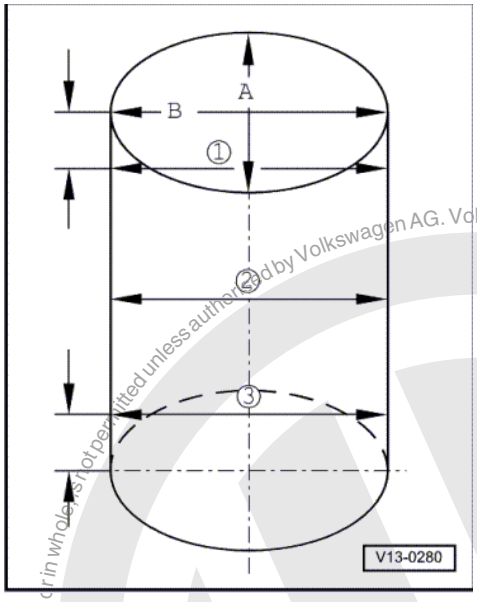

-> Fig. 3 Checking cylinder bores

Special tools, workshop equipment, testers, measuring instruments and auxiliary items required

- Internal dial gauge 50...100 mm

- Take measurements at 3 positions in both lateral -A- and longitudinal -B- directions, as illustrated. Deviation from nominal dimension
  max. 0.10 mm

Note:

Measuring the cylinder bores must not be done when the cylinder block is mounted on a repair stand with adapter bracket VW 540, as incorrect measurements would then be possible.

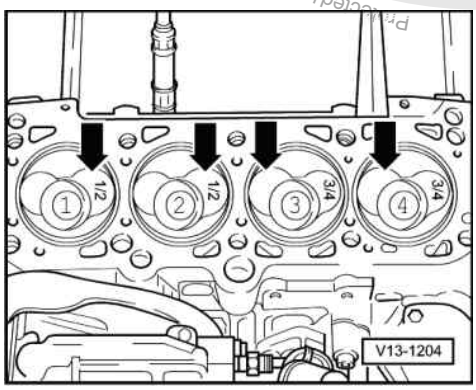

-> Fig.4 Piston installation position and piston/cylinder allocation

Piston in cylinders 1 and 2:

Produced by copying for private or commercial purposes, in part or in whole, is not permitted unless authorised by Volkswagen AG. Volkswagen AG does not guarantee or accept any liability with respect to the correctness of information in this document. Copyright by Volkswagen AG.

satelettronica

Larger inlet valve chamber towards flywheel -arrows-

Piston in cylinders 3 and 4:

Larger inlet valve chamber towards belt pulley side -arrows-.

Note:

New piston allocation to cylinders is shown by a coloured marking on piston crown.

- Piston for cylinder 1 and 2:
  marked 1/2
- Piston for cylinder 3 and 4:
  marked 3/4

4.2 - Checking piston projection at TDC

Special tools, workshop equipment, testers, measuring instruments and auxiliary items required

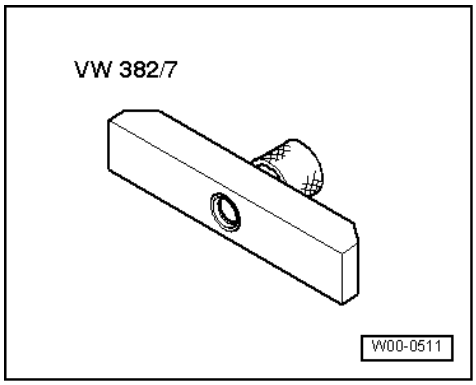

- -> VW 382/7

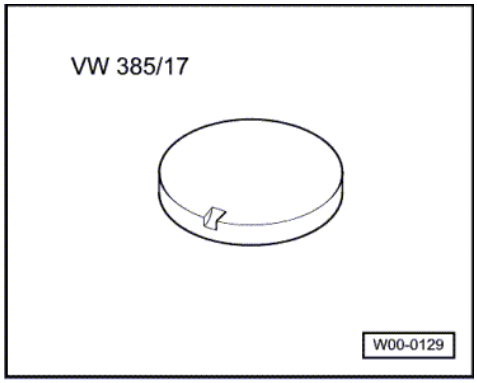

- -> VW 385/17

Test sequence

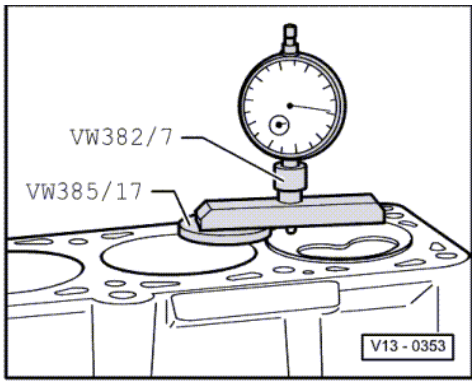

Protected by copyright. Copying for private or commercial purposes, in part or in whole, is not permitted unless authorised by Volkswagen AG. Volkswagen AG does not guarantee or accept any liability with respect to the correctness of information in this document. Copyright by Volkswagen AG.
satelettronica

-> Piston projection at TDC must be measured when installing new pistons or a short engine. Depending upon piston projection, install the corresponding cylinder head gasket according to following table:

Note:

Turn engine clockwise to measure piston projection at TDC.

Piston projection	Identification Holes/notches
0.91 mm ... 1.00 mm	1
1.01 mm ... 1.10 mm	2
1.11 mm ... 1.20 mm	3

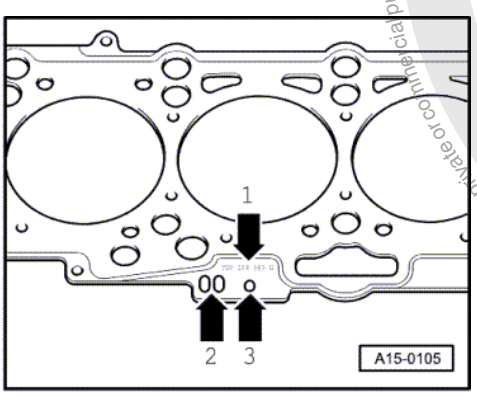

-> Cylinder head gasket identification

- Part No. = arrow 1
- Production control code = arrow 2 (can be disregarded)
- Holes = arrow 3

Note:

If differing figures are obtained when measuring piston projection, the highest figure should be taken when selecting the gasket.

4.3 - Piston and cylinder dimensions

Honing dimension		Piston-ø	Cylinder bore-ø
Basic dimen.	mm	79.47	79.51
1st oversize	mm	79.72	79.76
2nd oversize	mm	79.97	80.01

Protected by copyright. Copying for private or commercial purposes, in part or in whole, is not permitted unless authorised by Volkswagen AG. Volkswagen AG does not guarantee or accept any liability with respect to the correctness of information in this document. Copyright by Volkswagen AG.
satelettronica

15 - Cylinder head, Valve gear

1 - Removing and installing cylinder head

1.1 - Removing and installing cylinder head

Checking compressions=> Page 70

Notes:

- When installing an exchange cylinder head with fitted camshaft, the contact surfaces between the bucket tappets and the cam must be oiled before installing the cylinder head cover.
- The plastic packing pieces for protecting the open valves must not be removed until immediately before fitting cylinder head.
- If the cylinder head is replaced, all the coolant in the system must also be renewed.

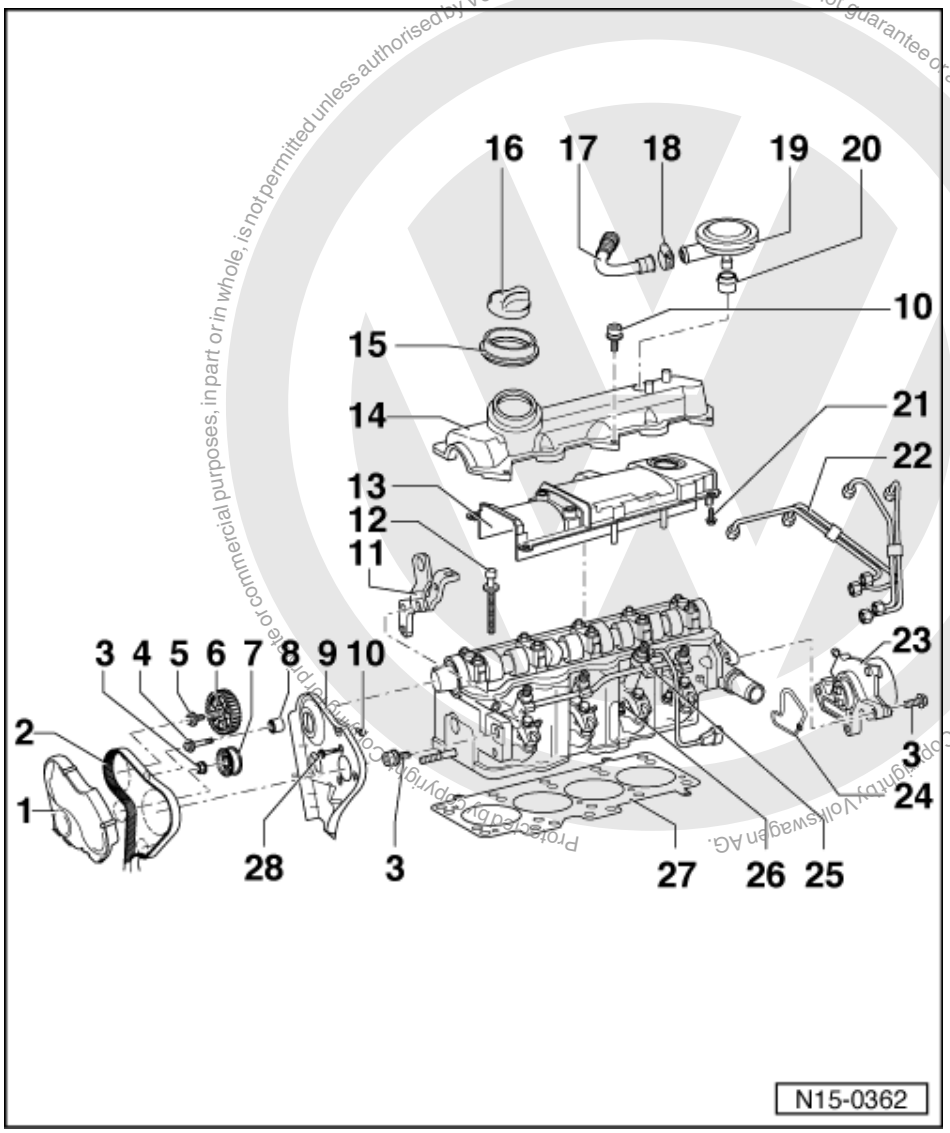

1 Toothed belt guard - upper part
2 Toothed belt
- Mark D.O.R. before removing
- Check for wear

satelettronica

- Do not kink
- Removing, installing and tensioning
  => Page 60

3 20 Nm
4 23 Nm
5 45 Nm
6 Camshaft sprocket
- Pull off with puller T40001

7 Tensioning roller
- Checking semi-automatic toothed belt tensioning roller
  => Page 66

8 Idler roller

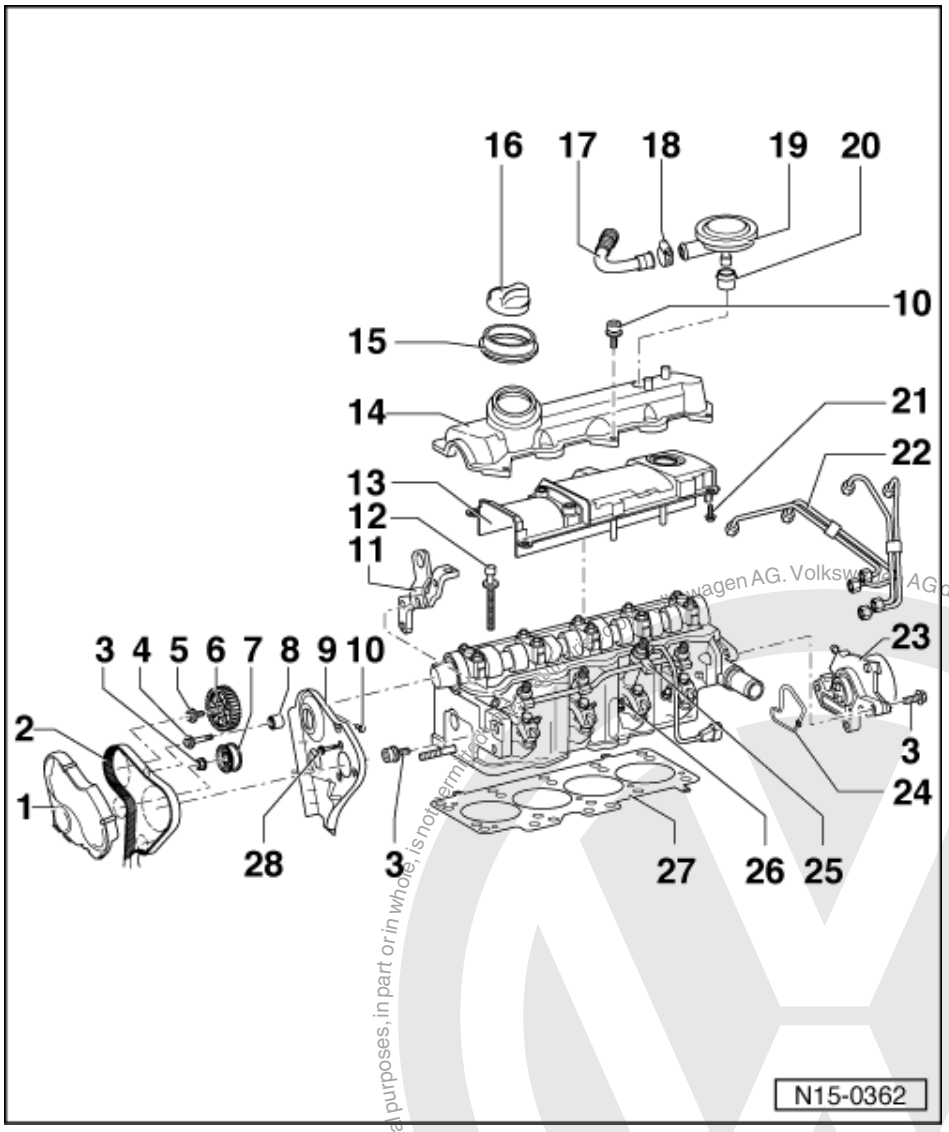

9 Rear toothed belt guard
10 10 Nm
11 Lifting eye
12 Cylinder head bolt
- Renew
- Note sequence when loosening and tightening
  => Page 68 , removing and installing cylinder head

13 Oil deflector
14 Cylinder head cover

satelettronica
Protected by copyright. Copyright by Volkswagen AG. Volkswagen AG does not guarantee or accept any liability with respect to the correctness of information in this document. Copyright by Volkswagen AG. Reproduction, in whole or in part, is not permitted for private or commercial purposes.

- With vulcanised seal

15 Seal
- Renew if damaged

16 Cap
- Renew seal if damaged

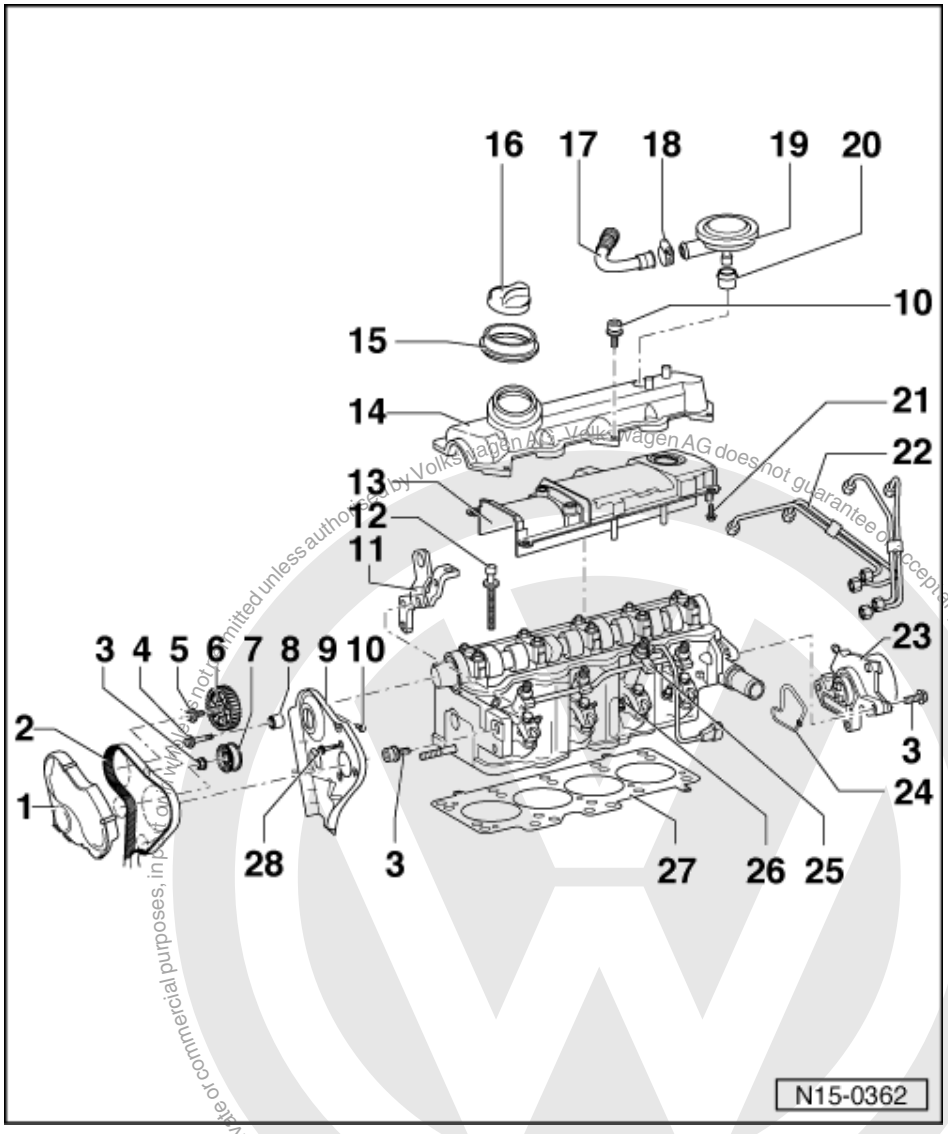

17 Breather pipe

18 Retaining clip

19 Pressure regulating valve
- For crankcase breather

20 Gasket
- Renew if damaged

21 5 Nm
- Only engine codes AGR, ALH, ASV

22 Injector pipes
- Tighten to 25 Nm
- Remove with 3035
- Always remove pipework complete
- Do not alter shape

23 Vacuum pump

Protected by copyright. Copying for private or commercial purposes, in part or in whole, is not permitted unless authorised by Volkswagen AG. Volkswagen AG does not guarantee or accept any liability with respect to the correctness of information in this document. Copyright by Volkswagen AG.
satelettronica

- For brake servo

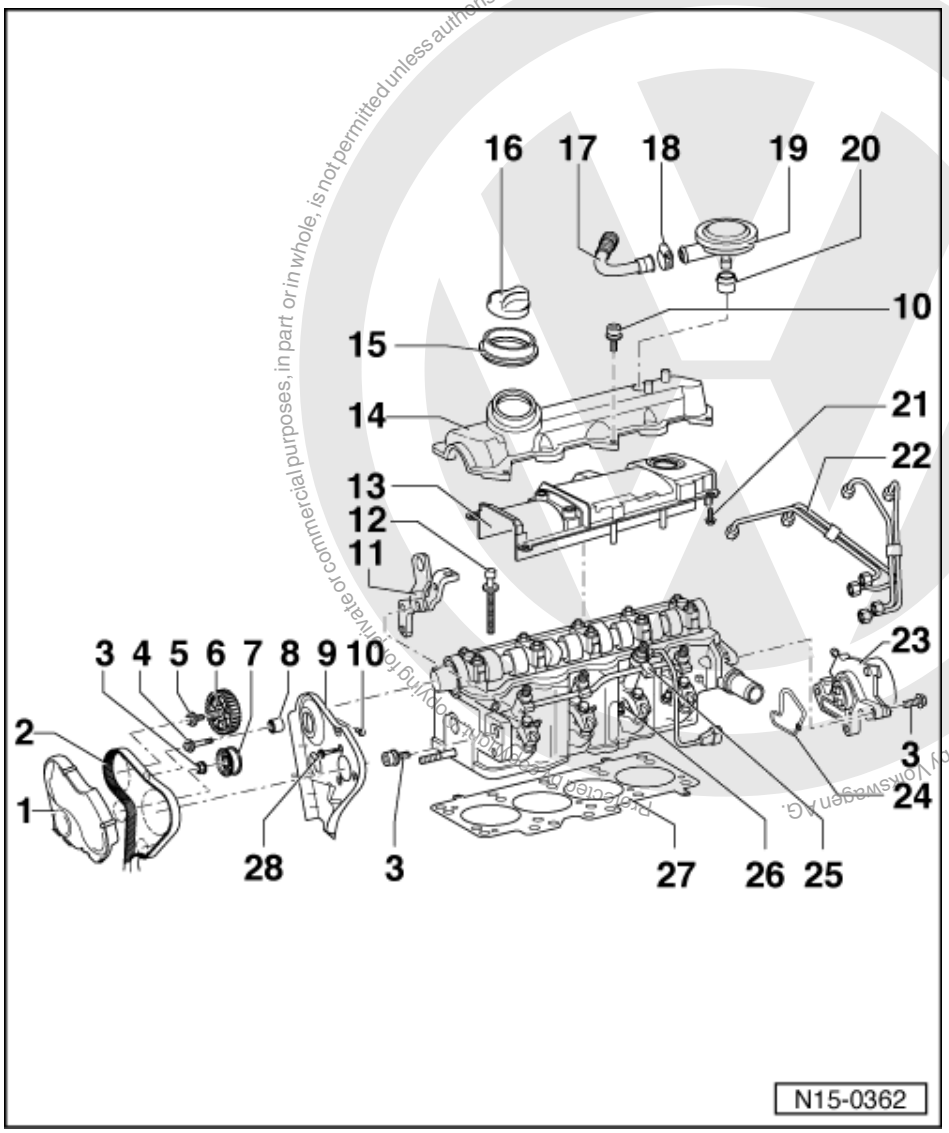

24 Gasket
- Renew

25 Injector
- Removing and installing

=> Repair group 23; Diesel direct system; Servicing injectors Diesel direct system Servicing injectors

26 Glow plug
- 15 Nm
- Checking

=> Repair group 28; Checking glow plug system; Checking glow plugs Checking glow plug system Checking glow plugs

27 Cylinder head gasket
- Renew
- Note marking
  =>Fig. 2
- If replaced renew the complete coolant

28 30 Nm

Volkswagen AG does not guarantee or accept any liability with respect to the correctness of information in this document. Copyright by Volkswagen AG. Reproduction, in part or in whole, is not permitted unless authorised by Volkswagen AG. Reproducing for private or commercial purposes, in part or in whole, is not permitted unless authorised by Volkswagen AG.
satelettronica

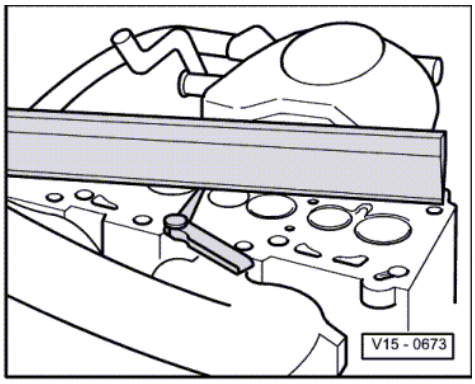

-> Fig. 1 Checking cylinder head for distortion

Max. permissible distortion: 0.1 mm

Note:

Reworking diesel cylinder heads is not permissible.

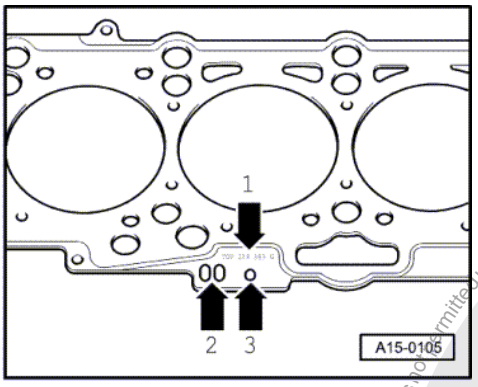

-> Fig.2 Cylinder head gasket identification

- Part No. = arrow 1
- Production control code = arrow 2 (can be disregarded)
- Holes = arrow 3

Note:

Different thicknesses of cylinder head gasket are fitted depending on the piston projection. When replacing the cylinder head gasket, install a new gasket with the same identification.

Protected by copyright. Copying for private or commercial purposes, in part or in whole, is not permitted unless authorised by Volkswagen AG. Volkswagen AG does not guarantee or accept any liability with respect to the correctness of information in this document. Copyright by Volkswagen AG.
satelettronica

1.2 - Dismantling and assembling intake manifold

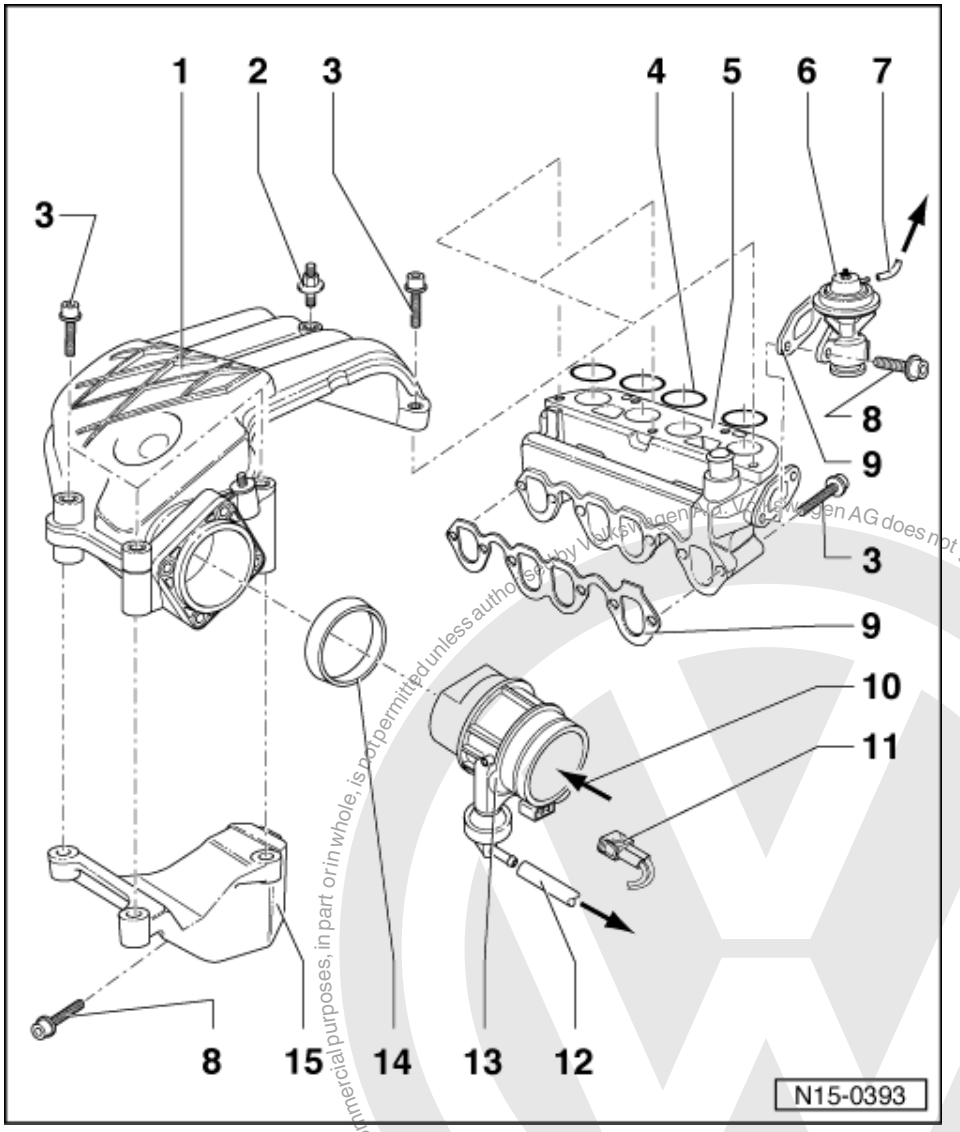

Engine codes AGP, AQM

1 Intake manifold - upper part
2 10 Nm
3 20 Nm
4 O-ring
- Renew
5 Intake manifold - lower part
6 Exhaust gas recirculation valve (mechanical)
- Checking => Page 189
7 Vacuum pipe
- To EGR-valve (N18)
8 25 Nm

Protected by copyright. Copying for private or commercial purposes, in part or in whole, is not permitted unless authorised by Volkswagen AG. Volkswagen AG does not guarantee or accept any liability with respect to the correctness of information in this document. Copyright by Volkswagen AG.
satelettronica

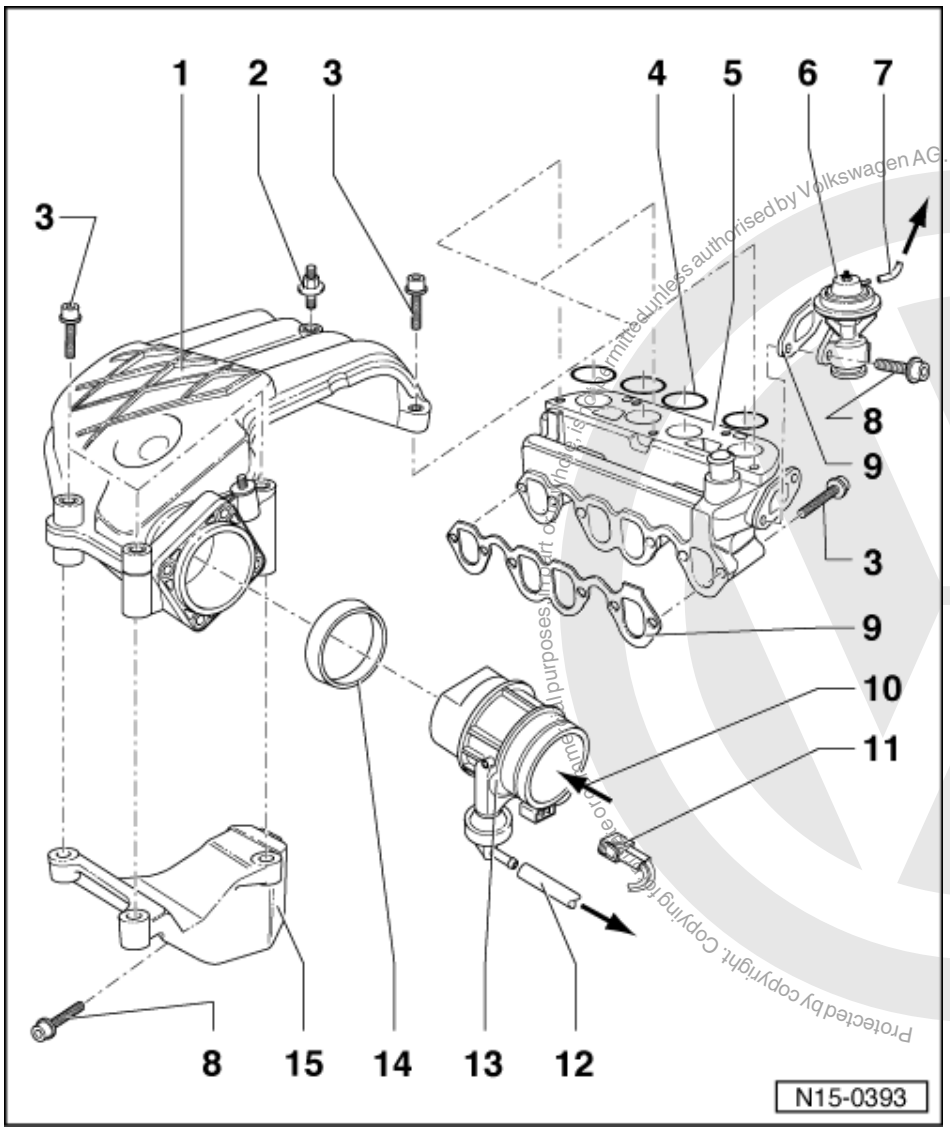

9 Gasket
- Renew

10 From air cleaner

11 Connector
- Black, 2-pin
- For intake manifold flap change-over valve (N239)

12 Vacuum pipe
- To non-return valve/vacuum pump branch piece

13 Air intake connecting piece
- Only renew complete
- With intake manifold flap change-over valve (N239) and intake manifold flap
- Removing and installing:

=> Repair group 23; Servicing diesel direct injection system Servicing diesel direct injection system

- Check intake manifold flap change-over and intake manifold flap change-over valve:

=> Repair group 23; Checking components and functions Checking components and functions

Protected by copyright. Copying for private or commercial purposes, in part or in whole, is not permitted unless authorised by Volkswagen AG. Volkswagen AG does not guarantee or accept any liability with respect to the correctness of information in this document. Copyright by Volkswagen AG.
satelettronica

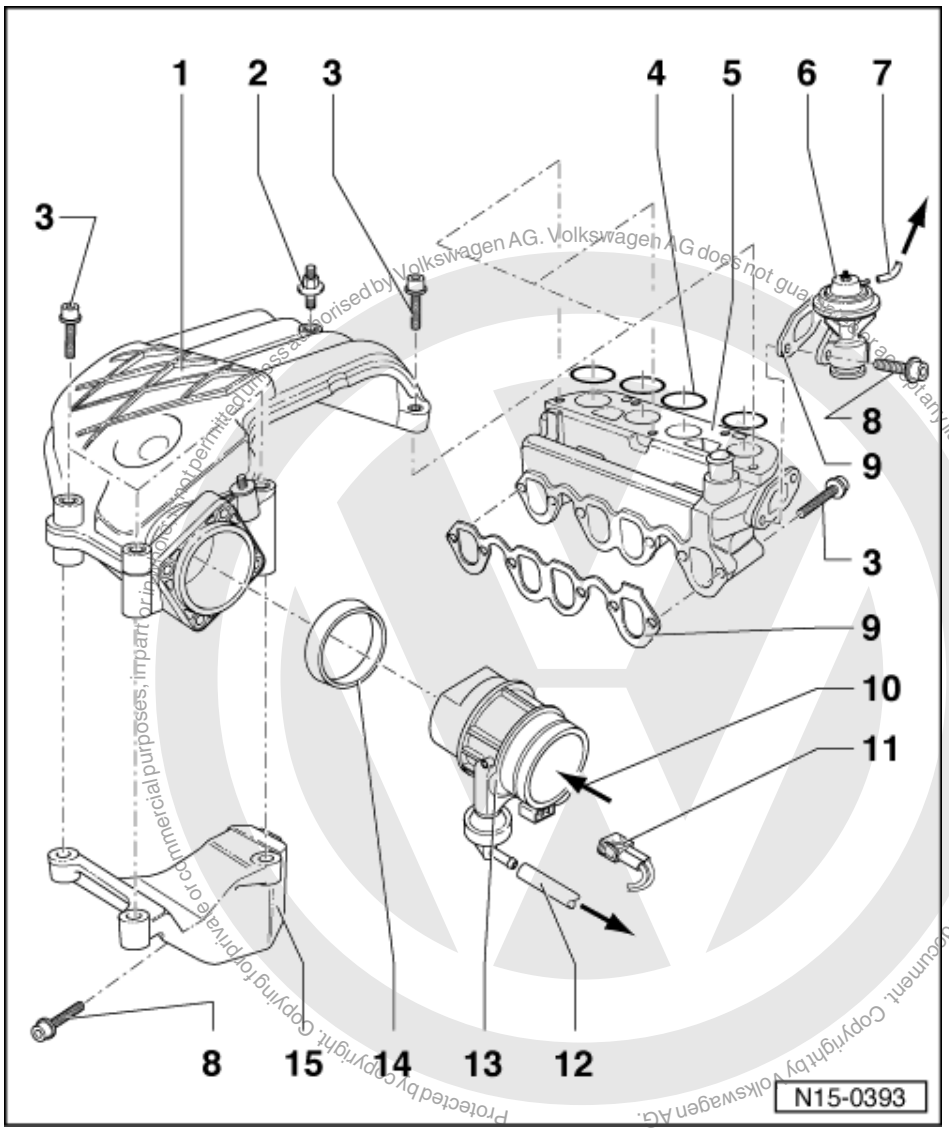

14 Seal

- Observe fitting position
- Renew if damaged

15 Bracket

satelettronica

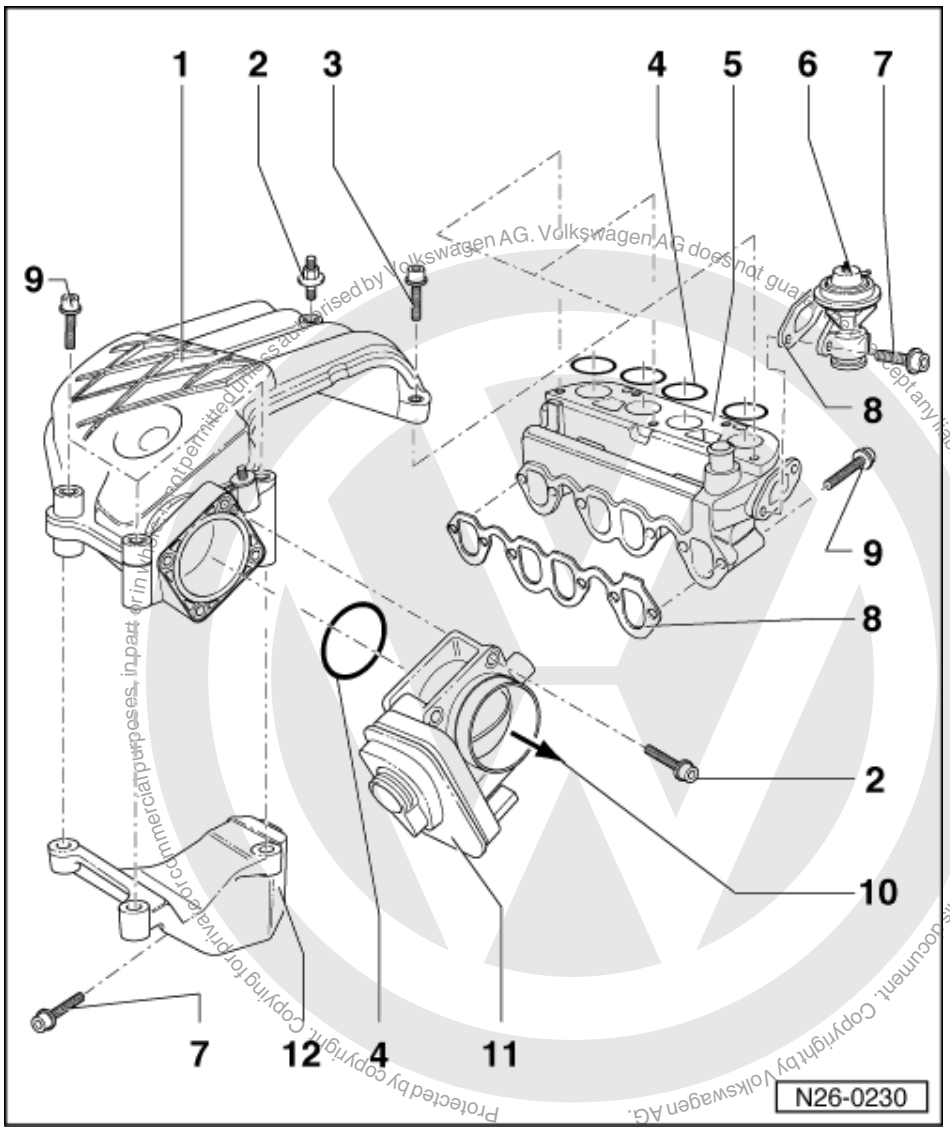

Engine code AYQ

1 Intake manifold - upper part
2 10 Nm
3 15 Nm
4 O-ring
- Renew
5 Intake manifold - lower part
6 Exhaust gas recirculation valve (mechanical)
- Checking => Page 189
7 25 Nm
8 Gasket
- Renew
9 20 Nm

satelettronica

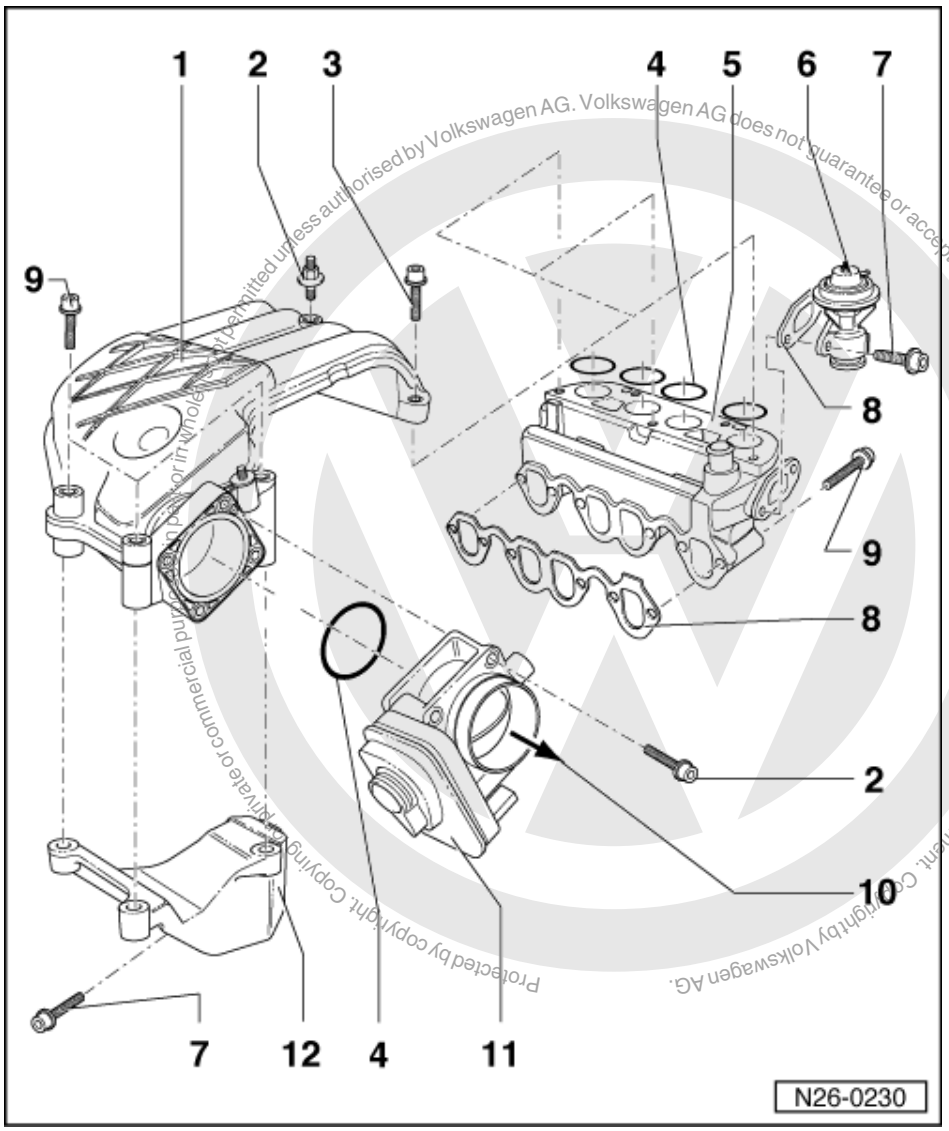

10 To air cleaner

11 Intake manifold flap motor (V157)

- Checking:

=> Repair group 23; Checking components and functions; Checking intake manifold flap motor Checking components and functions Checking intake manifold flap motor

12 Bracket

satelettronica

1.3 - Removing, installing and tensioning toothed belt

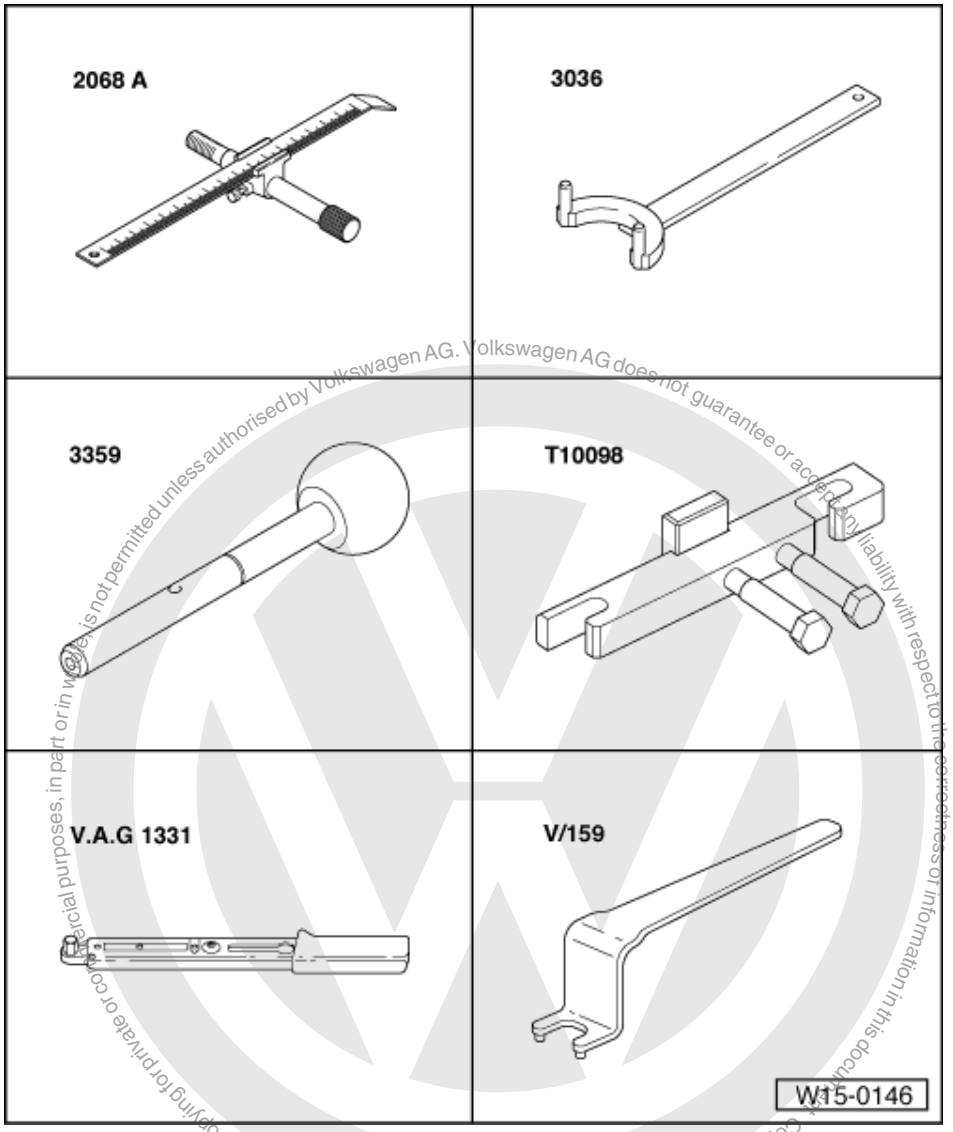

Protected by copyright. Copying for private or commercial purposes, in part or in whole, is not permitted unless authorised by Volkswagen AG. Volkswagen AG does not guarantee or accept any liability with respect to the correctness of information in this document. Copyright by Volkswagen AG.

satelettronica

Special tools, workshop equipment, test and measuring appliances and auxiliary items required

- 2068 A TDC setting device
- 3036 Counter-hold tool
- 3359 Locking pin
- T10098 Camshaft bar
- V.A.G 1331 Torque wrench (5...50 Nm)
- V159 pin wrench Matra (engine codes AGR, ALH, ASV)
- Hexagon key (engine codes AGP, AQM, AYQ)

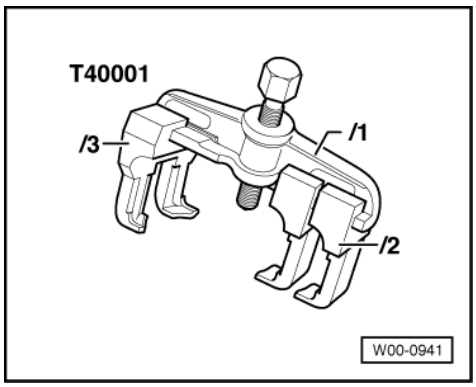

- T40001 Puller

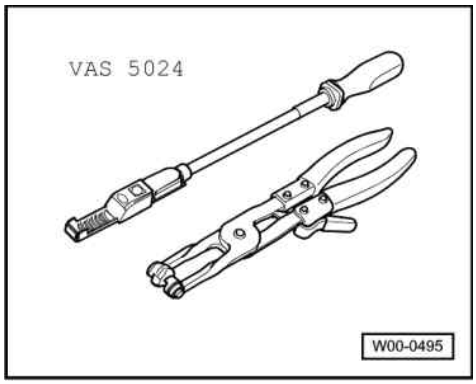

- VAS 5024 Assembly tool for spring-type clips

Removing

Engine codes AGR, ALH, ASV

- Remove connecting pipe between charge air cooler and intake manifold/pressure hose.

Continued for all engine codes

- Remove upper part of toothed belt guard.
- Remove vacuum pump for brake servo.
- Remove noise insulation tray.
- Remove ribbed belt => Page 25 .

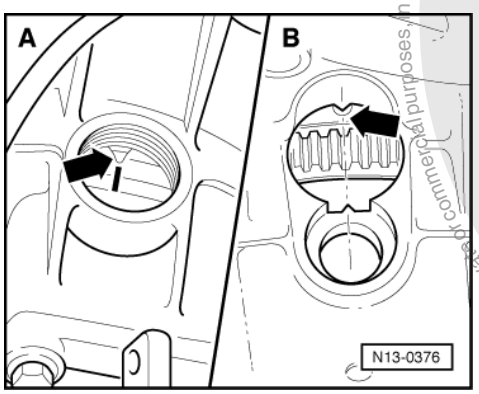

- -> Turn crankshaft to TDC No.1 cylinder
  A: Engine codes AGP, AQM, AYQ
  B: Engine codes AGR, ALH, ASV

Engine removed:

Protected by copyright. Copying for private or commercial purposes, in part or in whole, is not permitted unless authorised by Volkswagen AG. Volkswagen AG does not guarantee or accept any liability with respect to the correctness of information in this document. Copyright by Volkswagen AG.
satelettronica

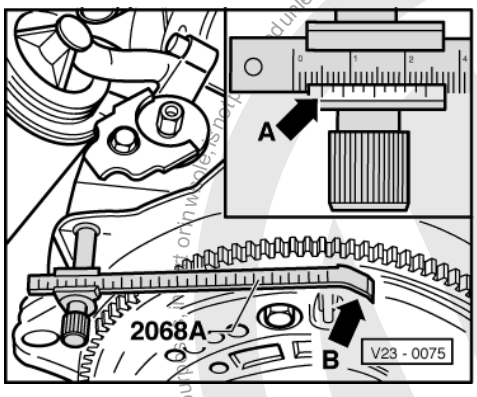

Engine codes AGP, AQM, AYQ

- -> Install adjustment device 2068 A as shown.
- Set adjustment device to 5 mm -arrow A-. The left-hand notch of the vernier scale is reference point.
- Turn crankshaft until flywheel TDC marking aligns with point of setting device -arrow B-.

Engine codes AGR, ALH, ASV

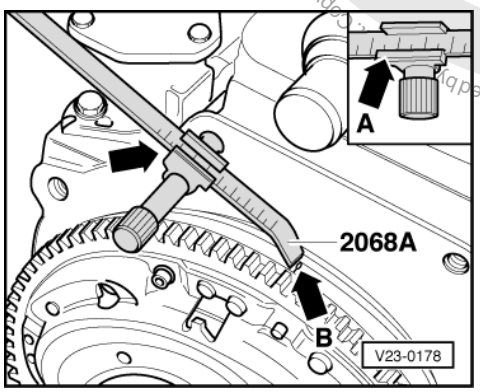

- -> Install adjustment device 2068 A as shown.
- Set adjustment device to 96 mm -arrow A-. The left-hand notch of the vernier scale is reference point.
- Turn crankshaft until flywheel TDC marking aligns with point of setting device -arrow B-.

Continued for all engine codes

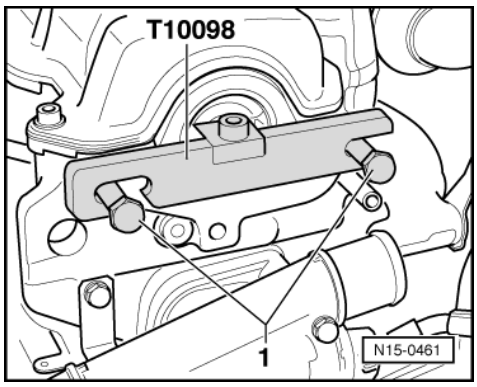

- -> Screw in fitted bolts -1- onto stop in cylinder head by hand.
- Lock camshaft with camshaft bar T10098 as shown.

Protected by copyright. Copyright by Volkswagen AG. Volkswagen AG does not guarantee or accept any liability with respect to the correctness of information in this document. Copyright by Volkswagen AG. Reproduction of this manual or parts thereof is not permitted unless authorised by Volkswagen AG.
satelettronica

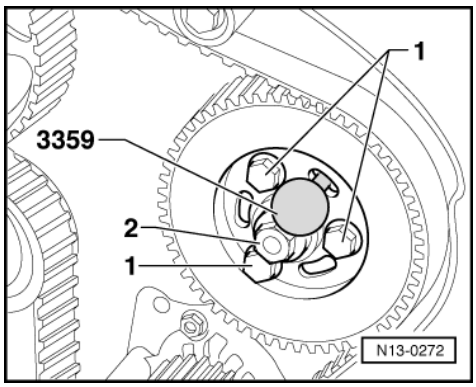

- -> Lock injection pump sprocket with pin 3359.

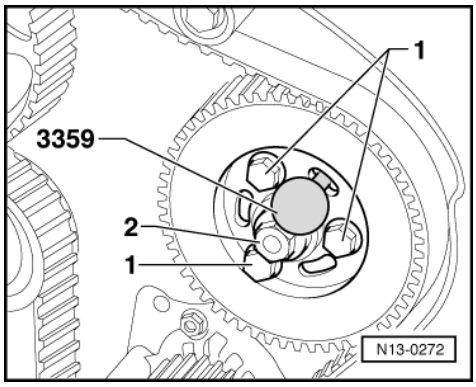

- Remove injection pump sprocket securing bolts -1-.

Notes:

- Unscrew securing bolts with chamfer on shaft and pointed end, one after the other, and renew. (Part No. of injection pump sprocket 038 130 111 A).
- Securing bolts without chamfer on shaft and pointed end need not be renewed. (Part No. of injection pump sprocket 038 130 111 B).
- The nut -2- on the pump shaft should never be loosened. Otherwise the basic pump setting will be altered and will not be able to be corrected with normal workshop tools.

- Loosen tensioner.
- Remove vibration damper/belt pulley.
- Remove lower and centre toothed belt guard.
- Mark D.O.R. of toothed belt.
- Take off toothed belt.

Installing

- Check whether TDC mark on flywheel and reference mark are aligned.
- Loosen the camshaft securing bolts a full turn. To loosen the camshaft sprocket securing bolts, use counter-hold tool 3036 to hold the camshaft sprocket.

Note:

Never use camshaft bar T10098 as a counter-hold when loosening and tightening the camshaft sprocket. Use counter-hold tool 3036.

Protected by copyright. Copyright for private and commercial purposes, in part or in whole is not permitted unless authorised by Volkswagen AG. Volkswagen AG does not guarantee or accept any liability with respect to the correctness of information in this document. Copyright by Volkswagen AG.
satelettronica

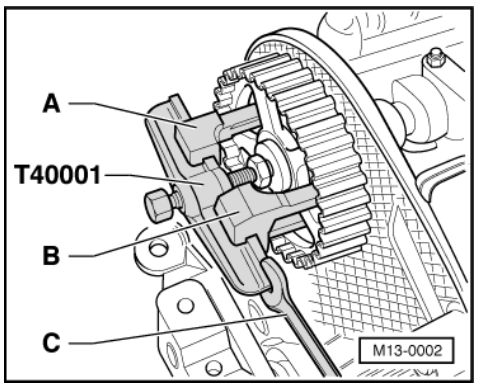

- -> Place puller T40001 with single leg T40001/2 -A- and double leg T40001/3 -B- centrally on the camshaft sprocket and pull it off.

  Use an open ended spanner -C- to counter-hold when doing this.

- Fit toothed belts on crankshaft toothed belt sprocket, idler wheel, injection pump sprocket, coolant pump sprocket and tensioning roller (note direction of rotation).
- Align injection pump sprocket to centre position in elongated holes.

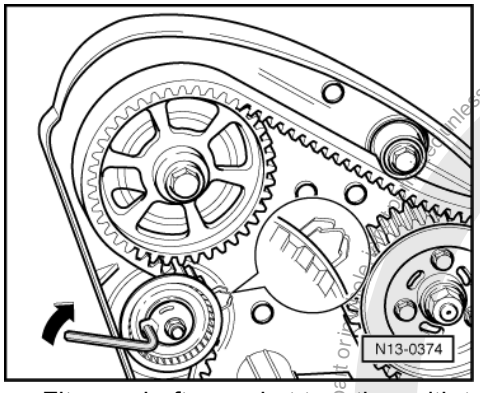

- Fit camshaft sprocket together with toothed belt and locate with securing bolt (camshaft sprocket can still turn).

Engine codes AGP, AQM, AYQ

- -> Tension toothed belt. Do this by turning eccentric clockwise using a commercially available hexagon key, until notch and indicator align.

Engine codes AGR, ALH, ASV

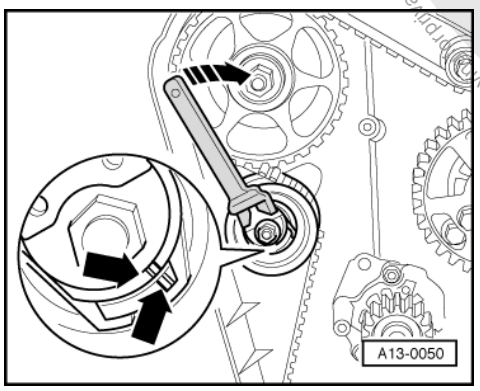

- -> Tension toothed belt. Using pin wrench (e.g. Matra V159) on eccentric turn clockwise until the notch and the raised mark -arrows- align.

Protected by copyright. Copyright by Volkswagen AG.
Copyright by Volkswagen AG. Volkswagen AG does not guarantee or accept any liability with respect to the correctness of information in this document.
satelettronica

Continued for all engine codes

Note:

If the eccentric has been turned too far the tensioning roller must be relieved completely and retensioned. The eccentric must never be turned back when it has been turned too far.

- Tighten lock nut on tensioning roller.
  Tightening torque: 20 Nm

Note:

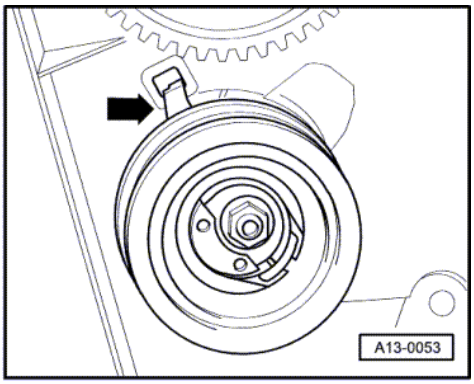

-> Ensure that tensioning roller seats correctly in rear toothed belt guard -arrow-.

- Check TDC mark on flywheel again.
- Tighten camshaft sprocket securing bolt.
  Torque setting: 45 Nm.

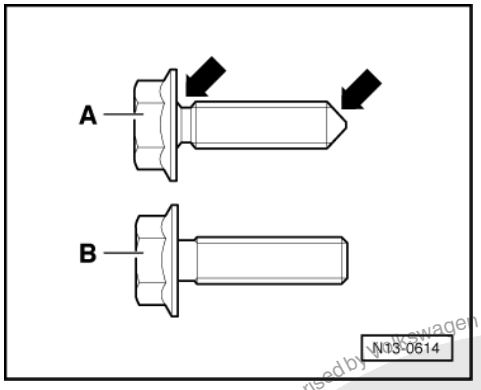

-> Type -A-: Securing bolts with chamfer on shaft and pointed end -arrows-

- Tighten new injection pump sprocket securing bolts.
  Tightening torque: 20 Nm

Notes:

- Following the dynamic test of the commencement of injection, the securing bolts should be tightened by 90° (1/4 turn).
- Because they are stretch bolts they must only be used once.

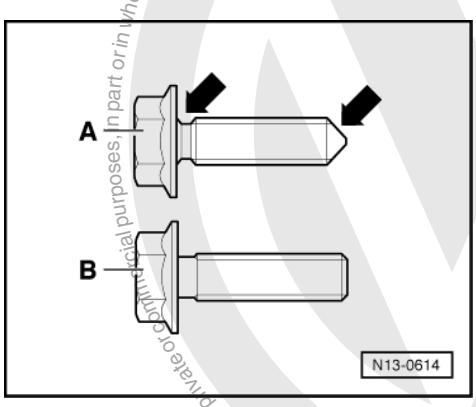

satelettronica
Protected by copyright. Copying for private or commercial purposes, in part or in whole, is not permitted unless authorised by Volkswagen AG. Volkswagen AG does not guarantee or accept any liability with respect to the correctness of information in this document. Copyright by Volkswagen AG.

Type -B-: Securing bolts without chamfer on shaft and pointed end

- Tighten the old injection pump sprocket securing bolts.
  Tightening torque: 25 Nm

Note:

Securing bolts need not be renewed.

Continuation for all versions

- Remove camshaft bar T10098 from camshaft.
- Remove pin.
- Turn crankshaft two rotations in engine D.O.R. and set again to TDC No. 1 cylinder.
- Check whether
  the TDC marking on the flywheel is correct
  the camshaft bar fits in the camshaft
  the locking pin fits in the injection pump sprocket
  the tensioning roller adjustment (notch/raised portion) or (notch/arrow)
  is correct.
- If the notch and raised portion or notch and arrow are not aligned, tension tensioning roller and tighten securing nut to 20 Nm.
- Turn crankshaft two rotations in engine D.O.R. until crankshaft is set to TDC No. 1 cylinder again.
- Repeat check.
- Install vacuum pump.
  Torque setting: 20 Nm
- Install toothed belt guard and vibration damper/ belt pulley.
- Install ribbed belt => Page 25 .
- Install noise insulation tray.

Engine codes AGR, ALH, ASV

- Install connecting pipe between charge air cooler and intake manifold/connecting hose.

Continued for all engine codes

- Checking injection pump commencement of delivery:

=> Repair group 23; Servicing Diesel direct injection system; Dynamically checking and adjusting injection pump commencement of delivery. Servicing Diesel direct injection system Dynamically checking and adjusting injection pump commencement of delivery.

1.4 - Checking semi-automatic toothed belt tensioning roller

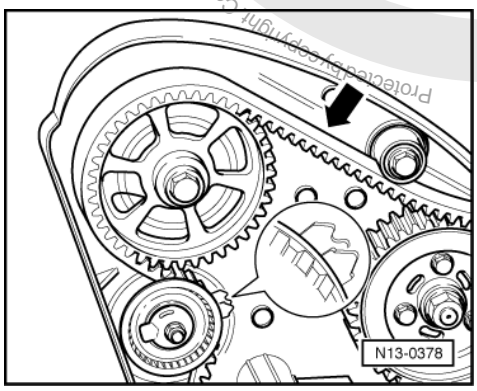

satelettronica

Test sequence

Engine codes AGP, AQM, AYQ

- -> Tension toothed belt with firm thumb pressure -arrow-.
  arrow and notch must move apart.
- Release thumb pressure on toothed belt. The tensioning roller must follow the movement of the toothed belt.

Note:

The tensioning roller does not return to original position after releasing tension on toothed belt.

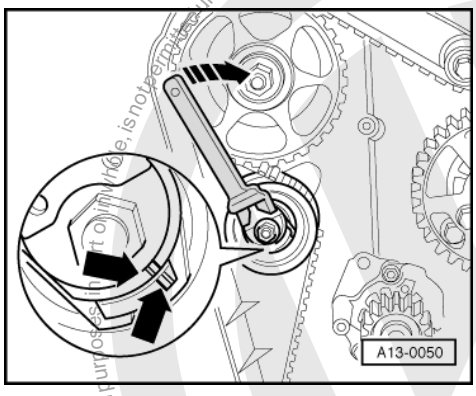

Engine codes AGR, ALH, ASV

- -> Tension toothed belt with firm thumb pressure.
  Notch and raised portion -arrows- must move apart.
- Release thumb pressure on toothed belt. The tensioning roller must move back to its initial position. (Notch and raised portion align again).

Protected by copyright. Copying for commercial purposes, part or complete, is not permitted unless authorised by Volkswagen AG. Volkswagen AG does not guarantee or accept any liability with respect to the correctness of information in this document. Copyright by Volkswagen AG.
satelettronica

1.5 - Removing and installing cylinder head

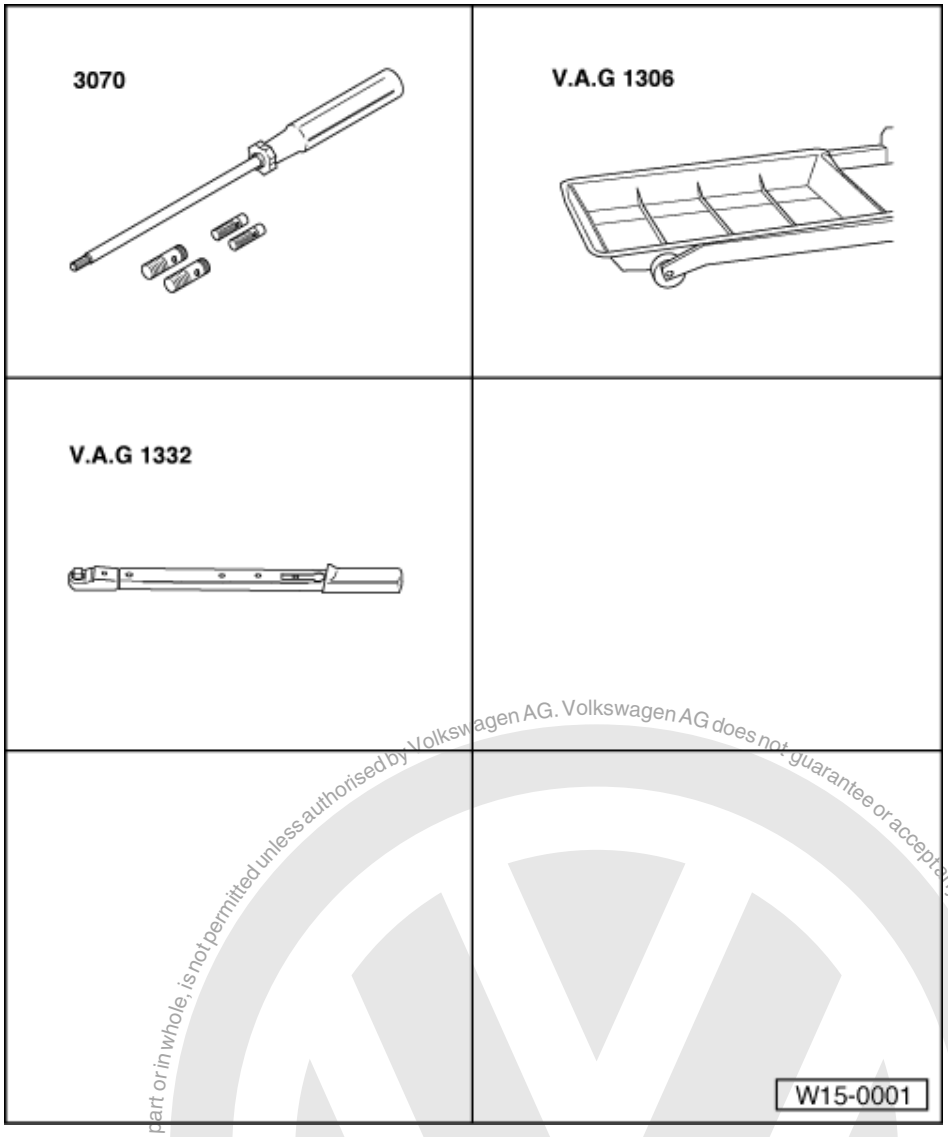

Special tools, workshop equipment, test and measuring appliances and auxiliary items required

- 3070 Fitting tool with guide pins
- V.A.G 1306 Drip tray
- V.A.G 1332 (40...200 Nm) Torque wrench

Removing

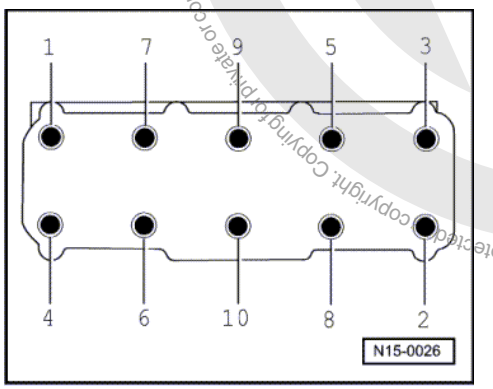

Protected copyright. Copying for private or commercial purposes, in part or in whole, is not permitted unless authorised by Volkswagen AG. Volkswagen AG does not guarantee or accept any liability with respect to the correctness of information in this document. Copyright by Volkswagen AG.
satelettronica

- -> Maintain sequence when loosening and tightening cylinder head bolts.

Installing

Notes:

- Always renew cylinder head bolts.
- In cases of repair carefully remove gasket remains from cylinder head and cylinder block. Ensure that no long grooves or scratches are created. When using abrasive paper do not use a grade less than 100.
- Carefully remove emery and abrasive remains.
- Remove new cylinder head gasket from packaging, just before installation.
- Handle gasket extremely carefully. Damaging the silicone layer or the indented area will lead to leaks.

- Turn crankshaft to TDC marking before fitting cylinder head.
- Turn crankshaft against engine direction of rotation until all pistons are approximately equally placed below TDC.

- Place cylinder head gasket on.

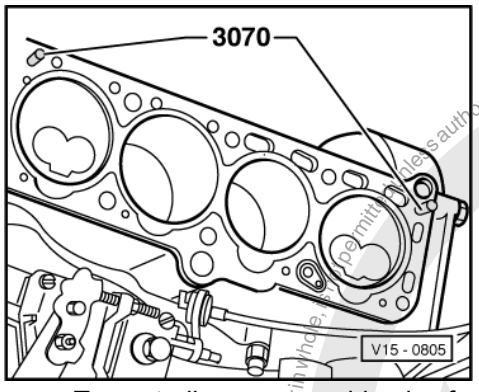

- -> To centralize, screw guide pins from 3070 into the outer threaded holes on the intake side.
- Fit cylinder head, screw in 8 remaining cylinder head bolts and tighten by hand.
- Remove guide pins with removal tool from 3070 and install cylinder head bolts.

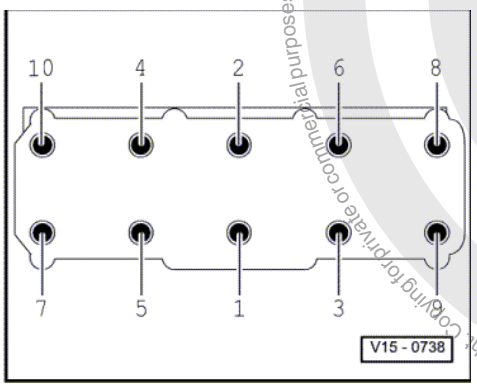

- -> Tighten cylinder head in four stages in sequence shown as follows:
- 1. Tighten initially with torque wrench:
  Stage I = 40 Nm
  Stage II = 60 Nm
- 2. Turn further with normal spanner:
  Stage III = 1/4 turn (90 °)
  Stage IV = 1/4 turn (90 °)

Note:

- Pulling-down cylinder head after repairs is not necessary.

- After tightening the cylinder head turn camshaft so that the cams for No. 1 cylinder point evenly upwards. Turn crankshaft, in engine D.O.R., To TDC before fitting toothed belt.

Photo copy copyright. Copying for private or commercial purposes, in whole or in part, is not permitted unless authorised by Volkswagen AG. Volkswagen AG does not guarantee or accept any liability with respect to the correctness of information in this document. Copyright by Volkswagen AG.
satelettronica

1.6 - Checking compression pressures

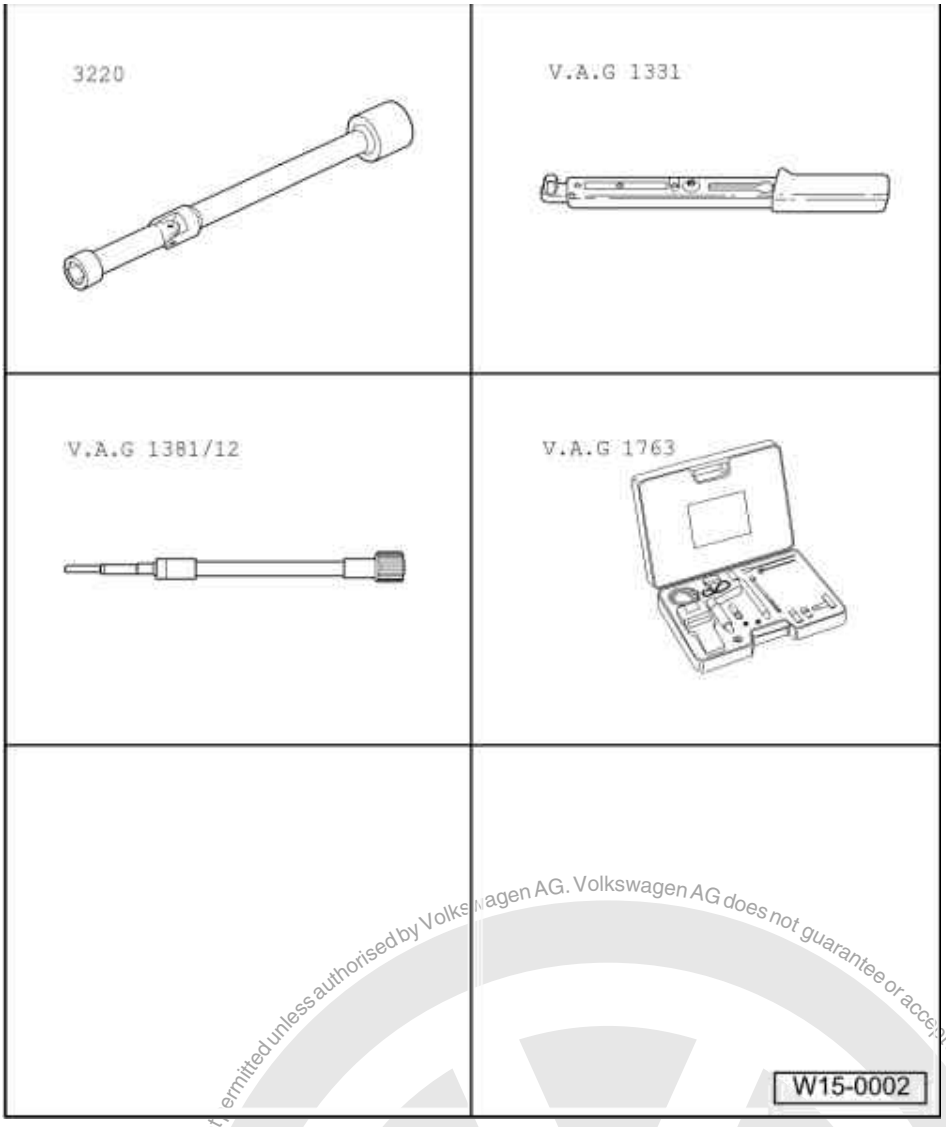

Special tools, workshop equipment, test and measuring appliances and auxiliary items required

- 3220 Joint spanner
- V.A.G 1331 Torque wrench (5...50 Nm)
- V.A.G 1381/12 Adapter
- V.A.G 1763 Compression tester

Test conditions

- Engine oil temperature min. 30 °C.

Protected by copyright. Copying for private or commercial purposes, in part or in whole is not permitted unless authorised by Volkswagen AG. Volkswagen AG does not guarantee or accept any liability with respect to the correctness of information in this document. Copyright by Volkswagen AG.
satelettronica

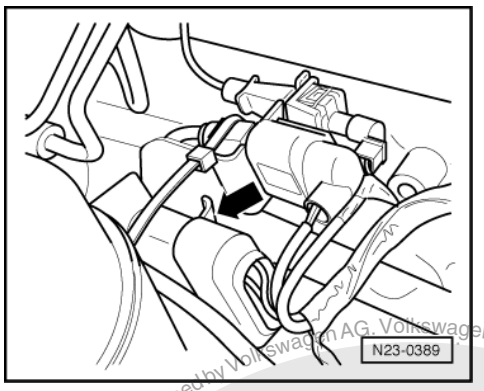

Test sequence

Engine codes AGP, AQM, AYQ

- Remove intake manifold upper part.

Continued for all engine codes

- -> Separate connection to metering unit of injection pump -arrow-.
- Remove all glow plugs using socket spanner 3220.

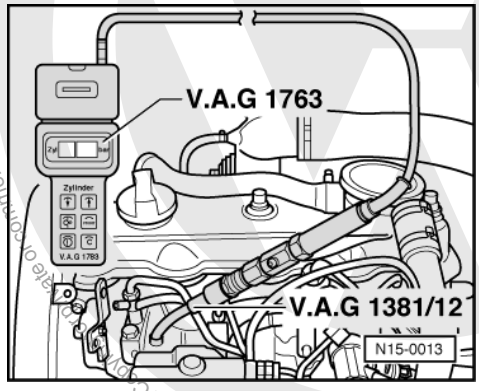

- -> Screw in adapter V.A.G 1381/12 in place of the glow plugs.
- Check compression pressure with compression tester V.A.G 1763.

Note:

Using the compression tester => Operating instructions.

- Operate starter until tester shows no further pressure increase.

Compression pressure:

New: 25...31 bar
Wear limit: 19 bar

Permissible difference between all cylinders: 5 bar

- Install glow plugs with socket and jointed extension 3220
  Tightening torque: 15 Nm.
- Interrogate fault memory:

=> Repair group 01; Self-diagnosis; Interrogating fault memory Self-diagnosis Interrogating fault memory

Protected by copyright. Copyright by Volkswagen AG. Volkswagen AG does not guarantee or accept any liability with respect to the correctness of information in this document. Copyright by Volkswagen AG. Reproduction in whole or in part or in whole is not permitted unless authorised by Volkswagen AG. Volkswagen AG does not guarantee or accept any liability with respect to the correctness of information in this document. Copyright by Volkswagen AG.
satelettronica

Note:

Faults will have been stored because the connector to injection pump has been separated. Therefore interrogate and erase fault memory.

2 - Servicing valve gear

2.1 - Servicing valve gear

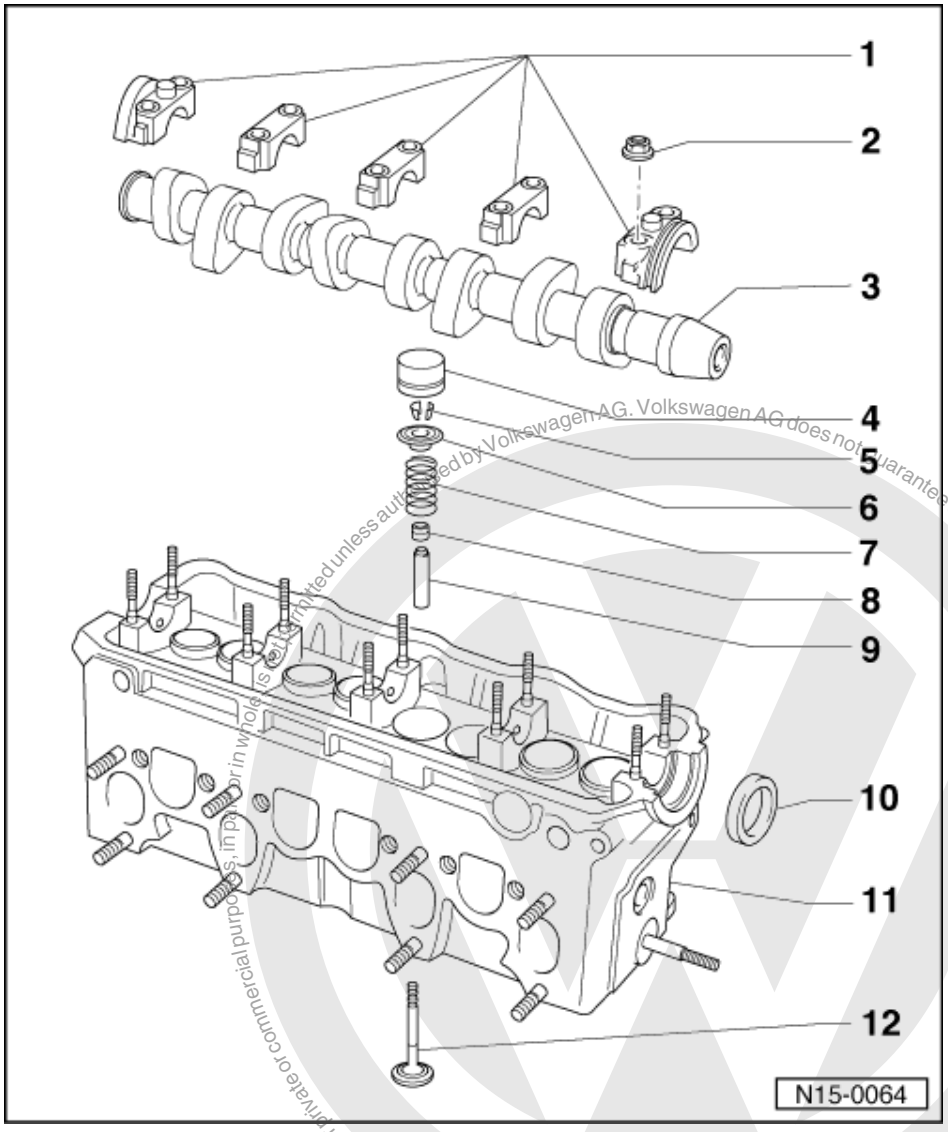

Note:

Cylinder heads with cracks between the valve seats may be used without reducing engine life, provided the cracks are small and not more than 0.5 mm wide.

1 Bearing cap
- Installation position => Fig. 2
- Installation sequence
  => Page 85 , removing and installing camshaft

2 20 Nm

Protected by copyright. Copying for private or commercial purposes, in part or in whole, is not permitted unless authorised by Volkswagen AG. Volkswagen AG does not guarantee or accept any liability with respect to the correctness of information in this document. Copyright by Volkswagen AG.
satelettronica

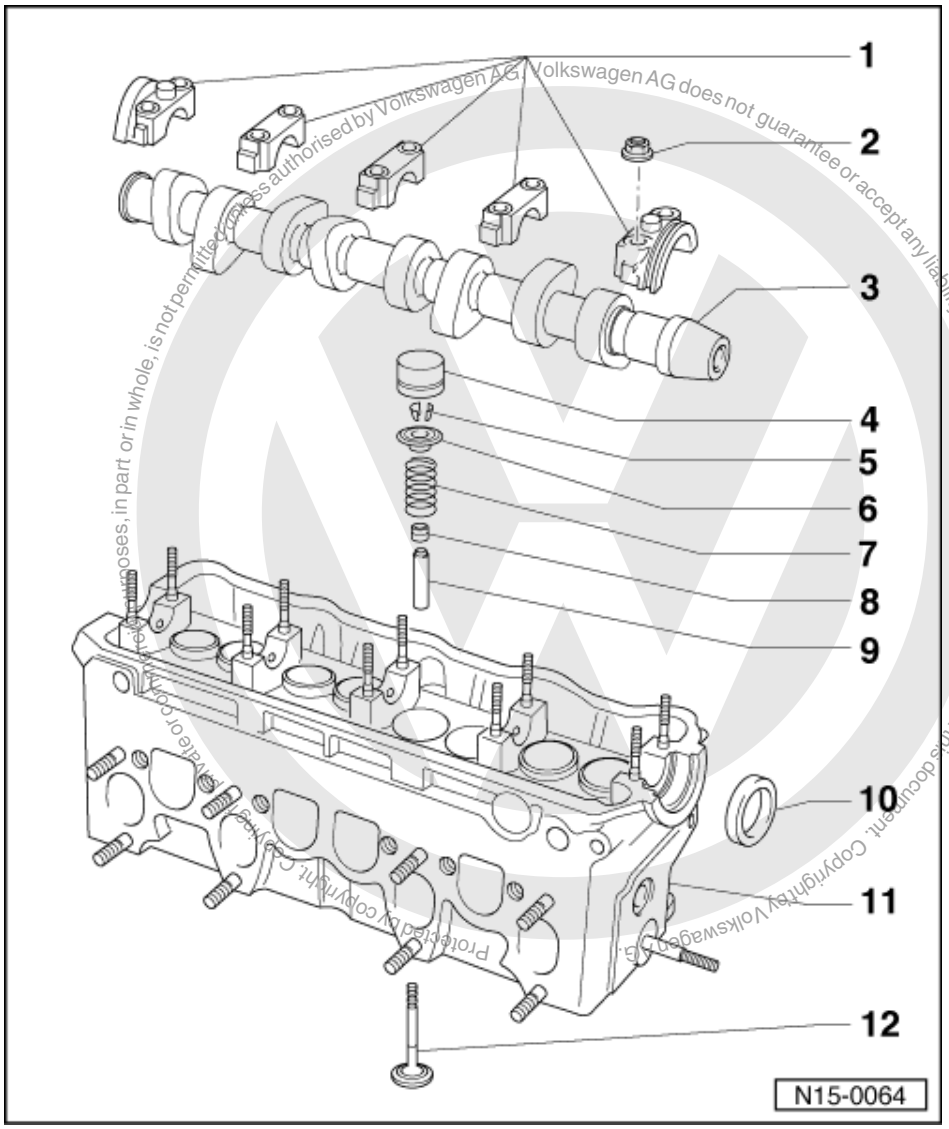

Protected by copyright. Copyright by Volkswagen AG.
Volkswagen AG does not guarantee or accept any liability with respect to the correctness of information in this document. Copyright by Volkswagen AG.
Reproduction, in part or in whole, is not permitted unless authorised by Volkswagen AG.

3 Camshaft
- Checking axial clearance => Fig. 1
- Removing and installing
  => Page 85
- Checking radial clearance with plastigage
  Wear limit: 0.11 mm
- Run-out: max. 0.01 mm
- Identification and valve timing
  => Fig. 4

4 Bucket tappet
- Do not interchange
- With hydraulic valve clearance compensation
- Checking => Page 89
- Store with cam lobe contact surface downwards
- Before installing check camshaft axial clearance => Fig. 1
- Oil contact surface

5 Cotters

satelettronica

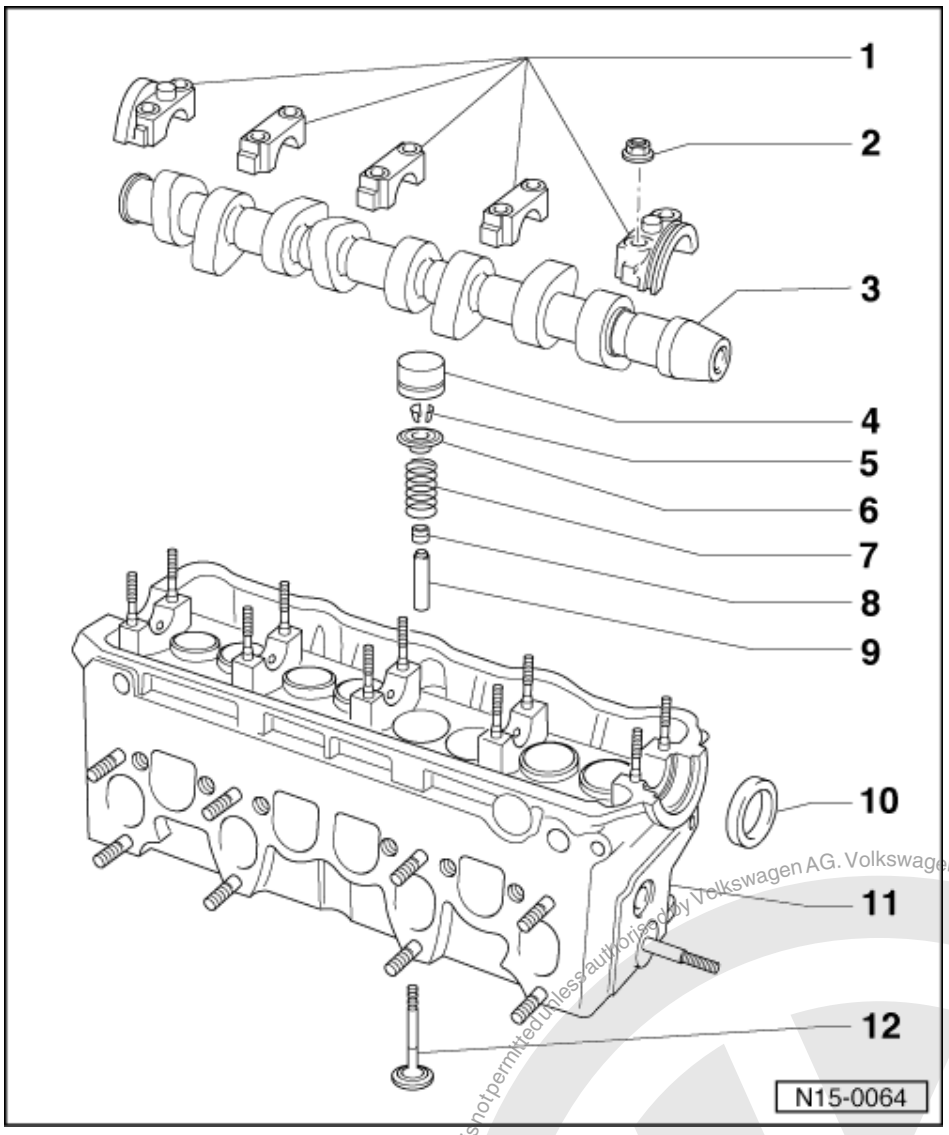

6 Upper valve spring plate

7 Valve spring

- Removing and installing:
  Cylinder head
  removed: with 2037
  installed: => Page 83 , renewing valve stem seals

8 Valve stem seal

- Renewing=> Page 83

9 Valve guide

- Checking => Page 80
- Renewing => Page 81
- Service version with collar

satelettronica
Protected by copyright. Copying for private or commercial purposes, in part or in whole, is not permitted unless authorised by Volkswagen AG. Volkswagen AG does not guarantee or accept any liability with respect to the correctness of information in this document. Copyright by Volkswagen AG.

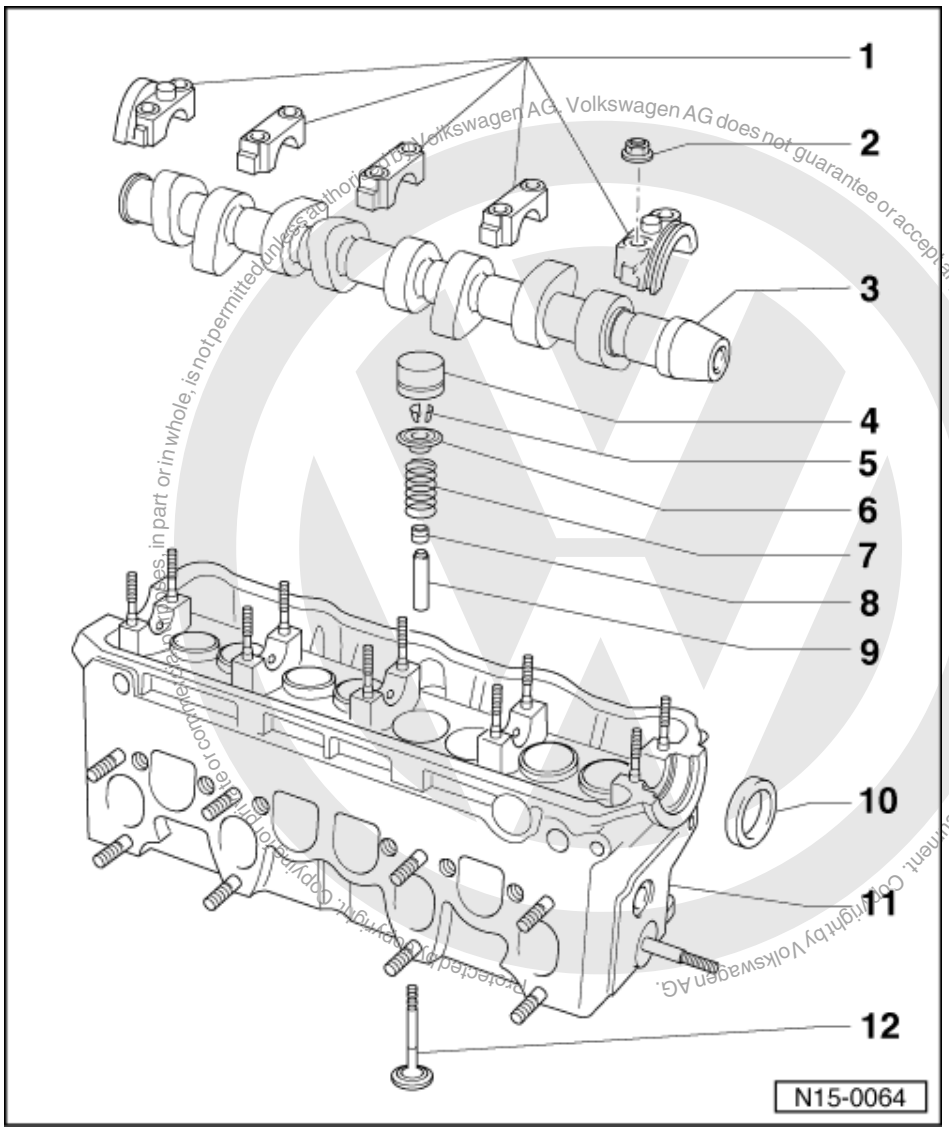

Protected by copyright. Copying for private or commercial purposes, in part or in whole, is not permitted unless authorised by Volkswagen AG. Volkswagen AG does not guarantee or accept any liability with respect to the correctness of information in this document. Copyright by Volkswagen AG.

10 Oil seal

- Note differing versions
- To remove and install, remove bearing cap
- Removing and installing toothed belt =>Page 60
- PTFE oil seal:
- Identification: no inner coil spring
- Gradual introduction of PTFE oil seals. An old-design radial seal (with circular spring) can be replaced by a PTFE seal. A PTFE seal, however, may not be replaced by an old-design radial seal.
- Do not additionally oil or grease the oil seal sealing lip
- Before installing, remove oil remains from crankshaft journal with a clean cloth
- To install, cover grove on camshaft taper (Sellotape)

satelettronica

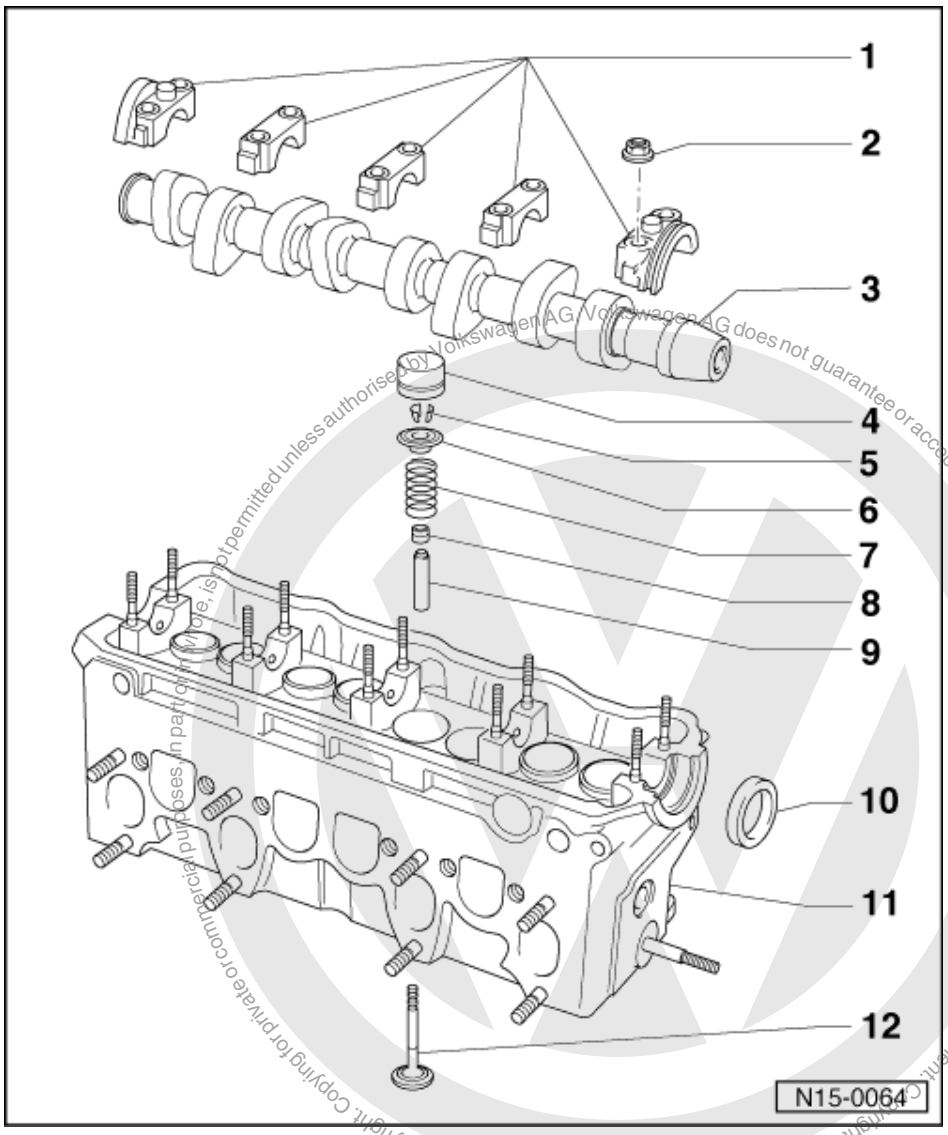

Protected by copyright. Copying for private or commercial purposes, in part or in whole, is not permitted unless authorised by Volkswagen AG. Volkswagen AG does not guarantee or accept any liability with respect to the correctness of information in this document. Copyright by Volkswagen AG.

11 Cylinder head

- See note
  => Page 72
- Reworking valve seats
  => Page 79

12 Valves

- Valve dimensions => Fig. 3

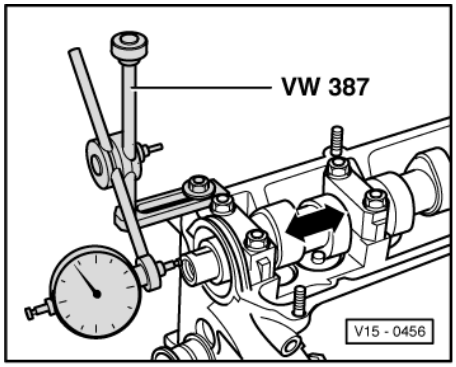

satelettronica

-> Fig. 1 Checking camshaft axial clearance

Special tools, workshop equipment, testers, measuring instruments and auxiliary items required

- Universal dial gauge bracket VW 387
- Dial gauge

Check with bucket tappets removed and with first and last bearing caps fitted.

Wear limit: max. 0.15 mm

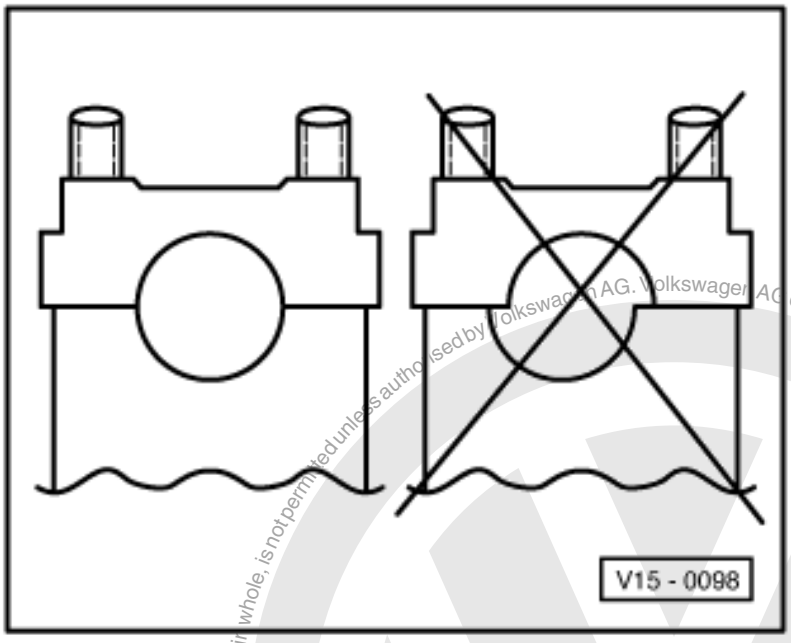

-> Fig. 2 Fitting position of camshaft bearing caps

Note offset. Before installing camshaft fit bearing caps and determine fitting position.

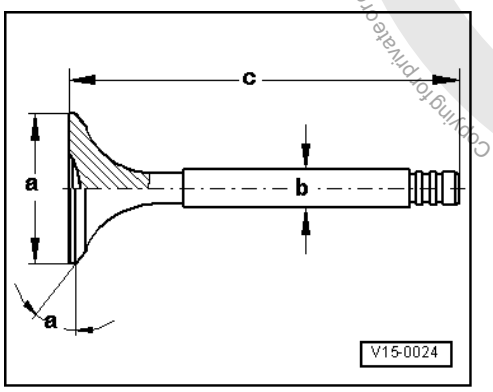

Protected by copyright. Copying for private or commercial purposes, in part or in whole, is not permitted unless authorised by Volkswagen AG. Volkswagen AG does not guarantee or accept any liability with respect to the correctness of information in this document. Copyright by Volkswagen AG.
satelettronica

-> Fig. 3 Valve dimensions

Note:

Valves must not be reworked. Only lapping-in is permitted.

Engine codes AGP, AQM, AYQ

Dimension		Inlet valve	Exhaust valve
øa	mm	35.95	31.45
øb	mm	6.963	6.943
c	mm	96.55	96.35
α	<°	45	45

Engine codes AGR, ALH, ASV

Dimension		Inlet valve	Exhaust valve
øa	mm	35.95	31.45
øb	mm	6.963	6.943
c	mm	96.85	96.85
α	<°	45	45

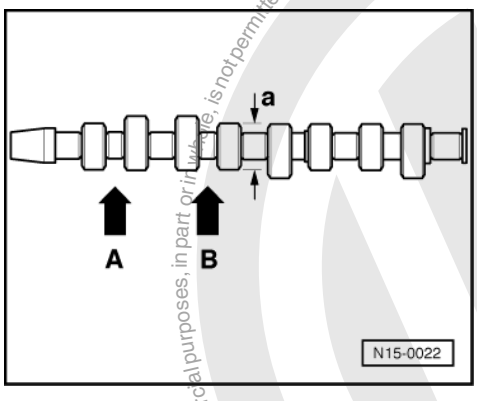

-> Fig.4 Camshaft identification, valve timing

Identification

- Cam base diameter: a = 38 mm ø
- Identification by stamped numbers and letters between inlet and exhaust cams:

Engine codes	AGR, ALH, ASV	AGP, AQM AYQ
No. 1 cylinder -arrow A-	38 A/38 K	38 E
No. 2 cylinder -arrow B-	DE	DE

Valve timing at 1 mm valve lift

Engine codes	AGR, ALH, ASV	AGP, AQM AYQ
Inlet opens after TDC	16 °	11 °
Inlet closes after BDC	25 °	25 °

Copyright by Volkswagen AG. Volkswagen AG does not guarantee or accept any liability with respect to the correctness of information in this document. Copying for private or commercial purposes, in part or in whole, is not permitted unless authorised by Volkswagen AG.
satelettronica

Engine codes	AGR, ALH, ASV	AGP, AQM AYQ
Outlet opens before BDC	28 °	40 °
Outlet closes before TDC	19 °	10 °

2.2 - Reworking valve seats

Special tools, workshop equipment, testers, measuring instruments and auxiliary items required

- Depth gauge
- Valve seat refacing tool

Notes:

- When repairing engines with leaking valves, it is not always sufficient to reface or renew valve seats and valves. It is also necessary to check the valve guides for wear. This is particularly important on high mileage engines.
- The valve seats should only be reworked just enough to produce a perfect seating pattern. The maximum permissible reworking dimension must be calculated before work is carried out. If the reworking dimension is exceeded, the function of the hydraulic tappets can no longer be guaranteed and therefore the cylinder head should be renewed.

The max. permissible reworking dimension is calculated as follows:

- Insert valve and press firmly against seat.

Note:

If the valve is to be renewed as part of a repair, use a new valve for the calculation.

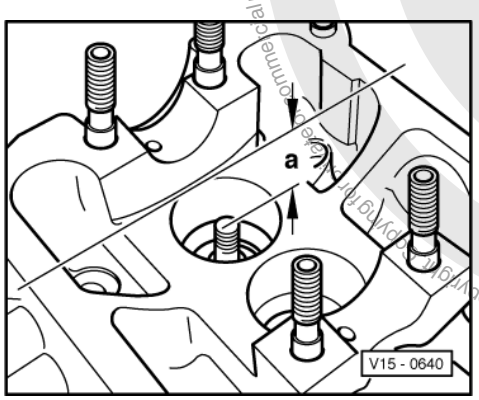

- -> Measure distance -a- between end of valve stem and upper edge of cylinder head.
- Calculate max. permissible reworking dimension from measured distance -a- and minimum dimension.

Minimum dimension:
Inlet valve 35.8 mm
Exhaust valve 36.1 mm

Measured distance minus minimum dimension
= max. permissible reworking dimension.

Protected by copyright. Copying for private or commercial purposes, in part or in whole, is not permitted unless authorised by Volkswagen AG. Volkswagen AG does not guarantee or accept any liability with respect to the correctness of information in this document. Copyright by Volkswagen AG.
satelettronica

Example:

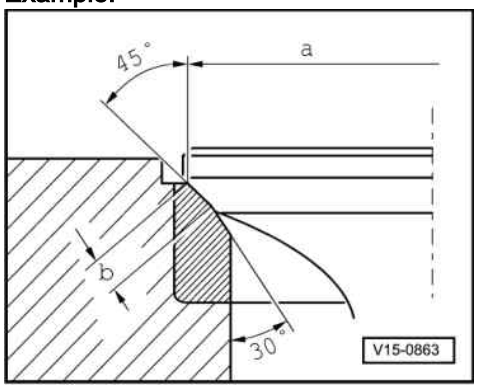

-	Measured distance	36.5	mm
	Minimum dimension	35.8	mm
=	max. perm. rework dimension	0.7	mm

-> Reworking inlet valve seat

a	= 35.7 mm ø
b	= 1.6 mm
45 °	= Valve seat angle

Note:
The 30 ° lower valve seat chamfer is necessary to ensure that the inlet channel flow characteristics are maintained.

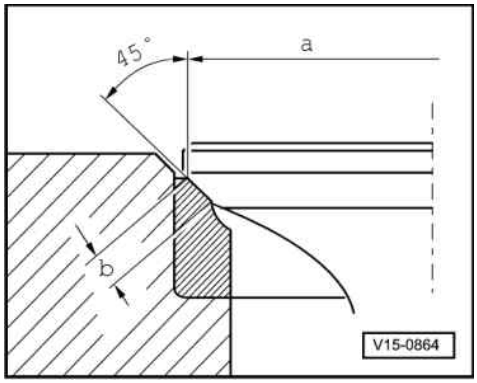

-> Reworking exhaust valve seat

a	= 31.4 mm ø
b	= 2.7 mm
45 °	= Valve seat angle

2.3 - Checking valve guides

Special tools, workshop equipment, testers, measuring instruments and auxiliary items required

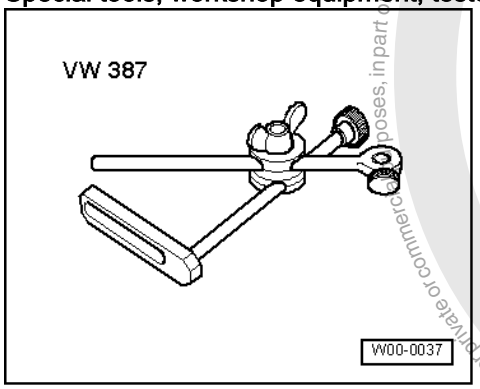

satelettronica
Protected by copyright. Copying for private or commercial purposes, in part or in whole, is not permitted unless authorised by Volkswagen AG. Volkswagen AG does not guarantee or accept any liability with respect to the correctness of information in this document. Copyright by Volkswagen AG.

- VW 387 Universal dial gauge bracket
- Dial gauge

Test sequence

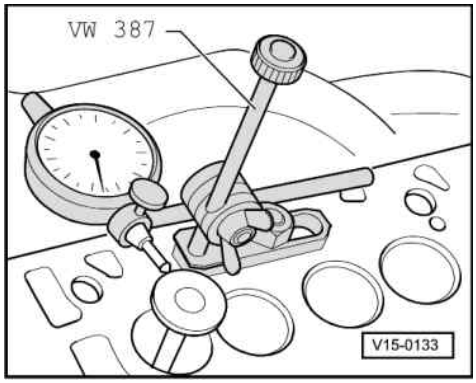

- -> Insert new valve into guide until end of valve stem is flush with end of guide. Due to the slight difference in stem dimensions, ensure that only an inlet valve is used in the inlet guide and an exhaust valve in the exhaust guide.
- Determine rock.
  Wear limit: 1.3 mm

If rock tolerance is exceeded:

- Renew valve guides => Page 81 .

2.4 - Renewing valve guides

Special tools, workshop equipment, testers, measuring instruments and auxiliary items required

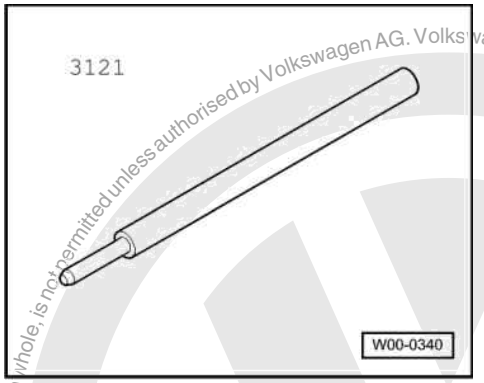

- -> 3121 Drift

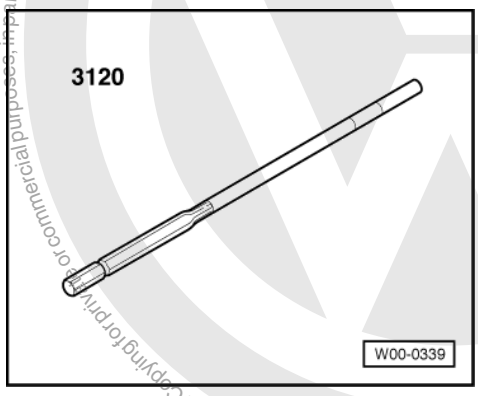

satelettronica
Protected by copyright. Copying for private or commercial purposes, in part or in whole, is not permitted unless authorised by Volkswagen AG. Volkswagen AG does not guarantee or accept any liability with respect to the correctness of information in this document. Copyright by Volkswagen AG.

- -> 3120 Reamer and cutting fluid

Removing

- Clean and check cylinder head. Cylinder heads in which the valve seats can no longer be reworked, or cylinder heads which have already been machined to the minimum dimension, should not have the valve guides replaced.
- Press out worn valve guides with 3121 from the camshaft side (valve guides with shoulder - repair version - from the combustion chamber side).

Installing

- Press in new guides, moistened with oil, from camshaft side onto shoulder in cold cylinder head using drift 3121.

Note:

When the shoulder on guide makes contact, the pressure must not exceed 1.0 t otherwise shoulder may break off.

- Ream guides out with hand reamer 3120 using plenty of cutting fluid.
- Rework valve seats => Page 79 .

2.5 - Renewing valve stem seals

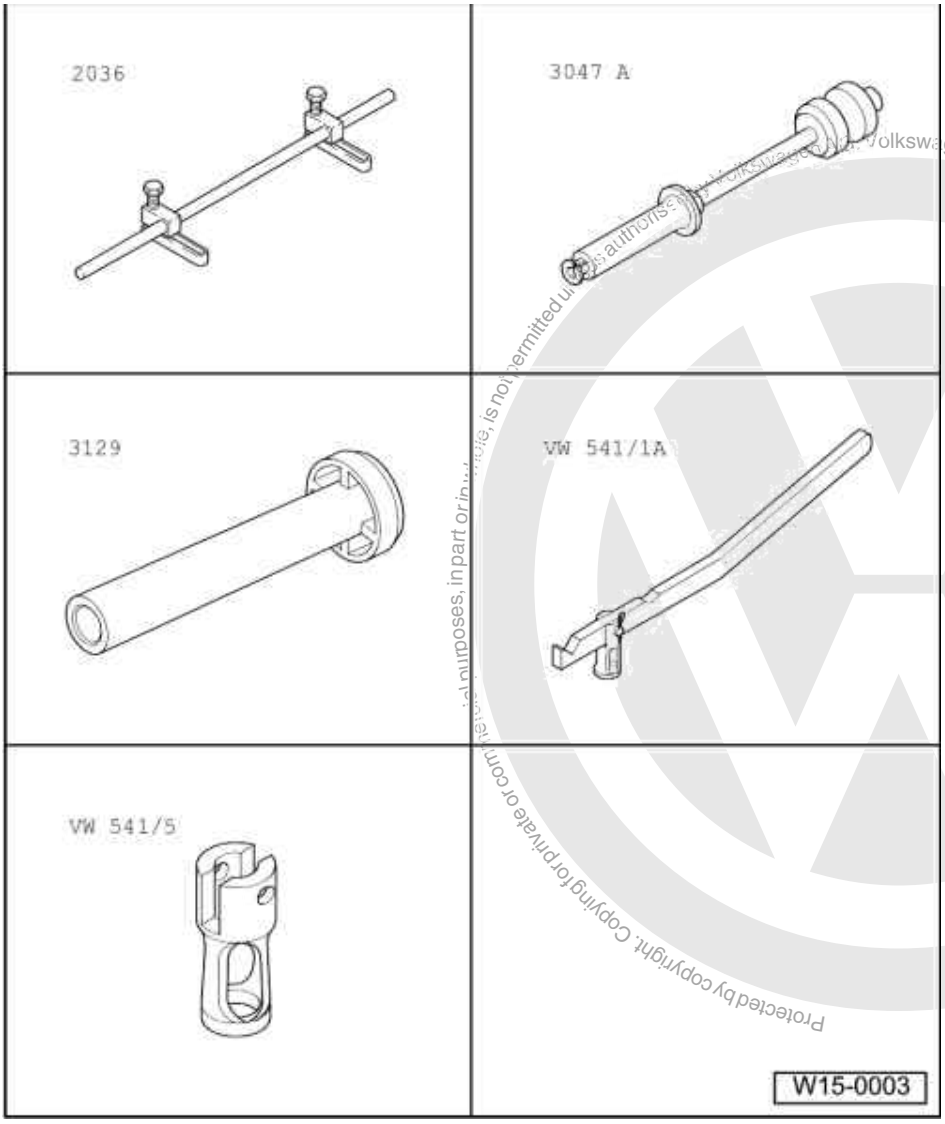

Protected by copyright. Copying for private or commercial purposes, in part or in whole, is not permitted unless authorised by Volkswagen AG. Volkswagen AG does not guarantee or accept any liability with respect to the correctness of information in this document. Copyright by Volkswagen AG.
satelettronica

Protected by copyright. Copying for private or commercial purposes, in part or in whole, is not permitted unless authorised by Volkswagen AG. Volkswagen AG does not guarantee or accept any liability with respect to the correctness of information in this document. Copyright by Volkswagen AG.

Special tools, workshop equipment, test and measuring appliances and auxiliary items required

- 2036 Assembly appliance
- 3047A Puller
- 3129 Fitting tool
- VW 541/1A Valve lever
- VW 541/5 Thrust piece

Removing

(with cylinder head fitted)

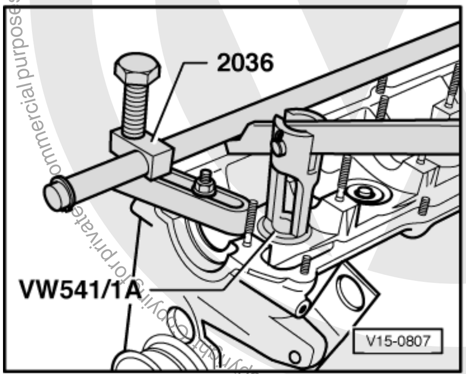

- Remove camshaft => Page 85 .
- Remove the bucket tappets and place them with the contact surface downwards. When doing this ensure that the tappets are not interchanged.
- Set piston of respective cylinder to top dead centre (TDC).
- -> Fit assembly tool 2036 and adjust mountings to height of studs.

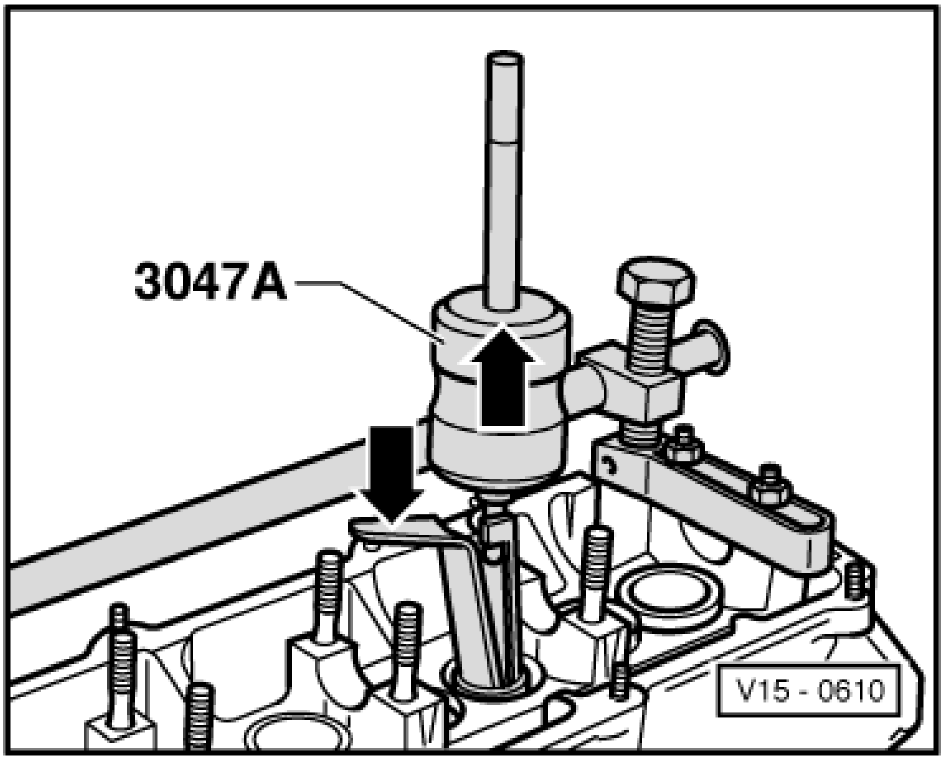

- Remove valve springs with lever VW 541/1A and press piece VW 541/5.

satelettronica

Note:

The valves are supported by the piston crown.

- -> Pull off valve stem seals with 3047A.

Installing

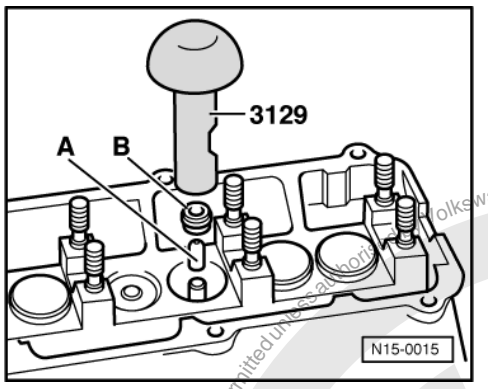

- -> Place the plastic sleeve -A- supplied on the appropriate valve stem. This will prevent the new valve stem seal -B- being damaged.
- Insert new valve stem seal in fitting tool 3129.
- Oil valve stem seal sealing lip and press carefully onto the valve guide.

Protected by copyright. Copying for private or commercial purposes, in part or in whole, is not permitted unless authorised by Volkswagen AG. Volkswagen AG does not guarantee or accept any liability with respect to the correctness of information in this document. Copyright by Volkswagen AG.
satelettronica

2.6 - Removing and installing camshaft

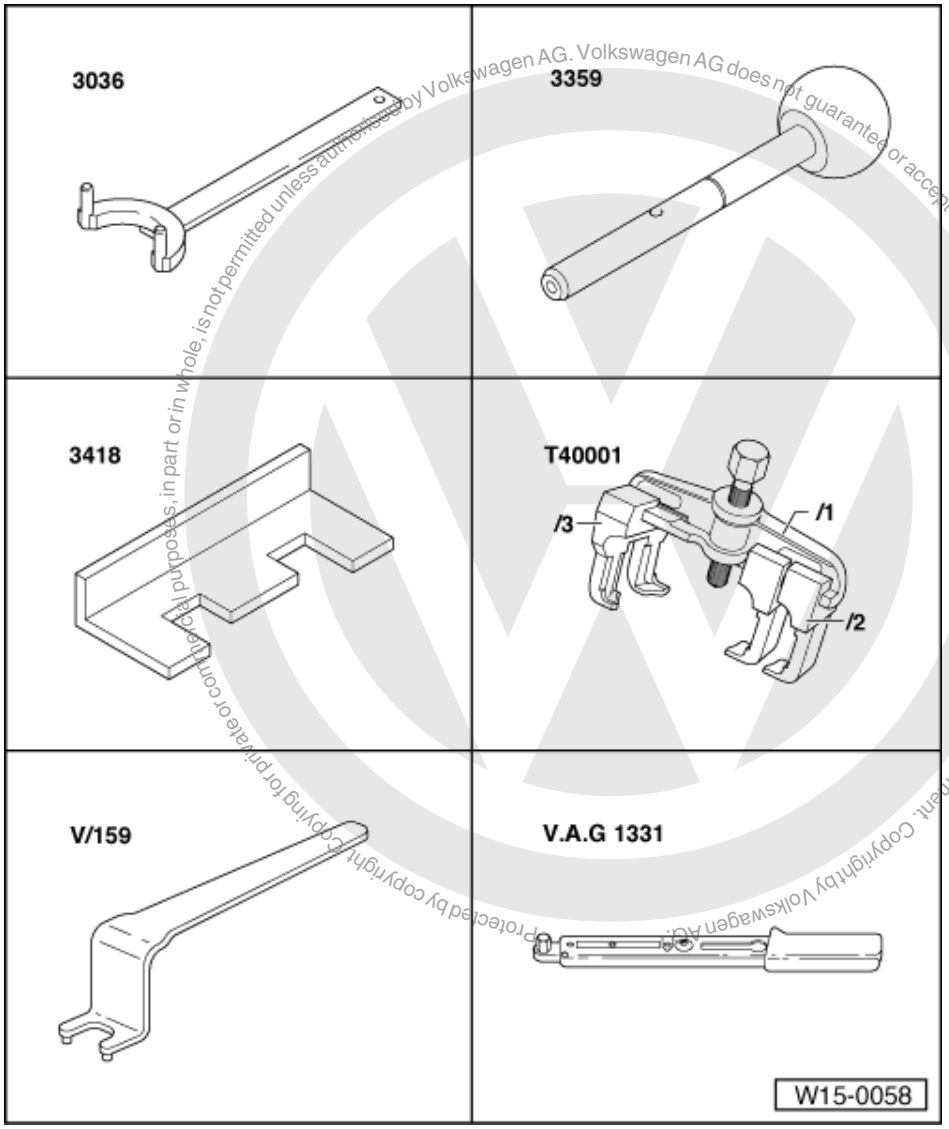

Copyright by Volkswagen AG. Volkswagen AG does not guarantee or accept any liability with respect to the correctness of information in this document. Copyright by Volkswagen AG. Protected by copyright. Copying for private or commercial purposes, in part or in whole, is not permitted unless authorised by Volkswagen AG.

satelettronica

Special tools, workshop equipment, test and measuring appliances and auxiliary items required

- 3036 Counter-hold tool
- 3359 Locking pin
- 3418 Setting bar
- T40001 Puller
- V159 pin wrench Matra
- V.A.G 1331 Torque wrench (5...50 Nm)

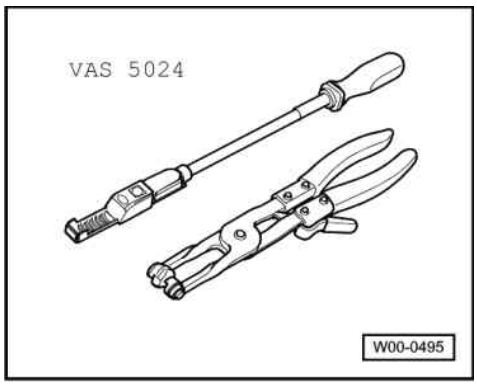

◆ VAS 5024 Assembly tool for spring-type clips

Removing

Engine codes AGP, AQM, AYQ

- Remove intake manifold upper part.

Engine codes AGR, ALH, ASV

- Remove connecting pipe between charge air cooler and intake manifold/pressure hose.

Continued for all engine codes

- Remove upper toothed belt guard, cylinder head cover and vacuum pump.

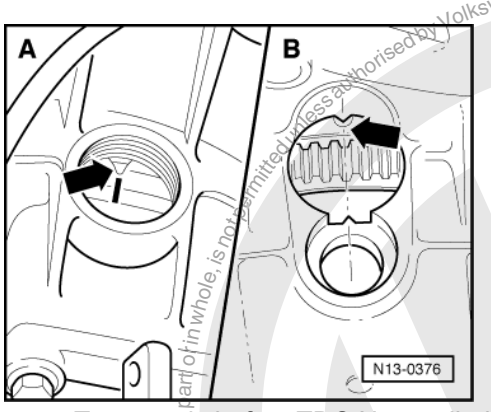

- -> Turn crankshaft to TDC No.1 cylinder
  A: Engine codes AGP, AQM, AYQ
  B: Engine codes AGR, ALH, ASV

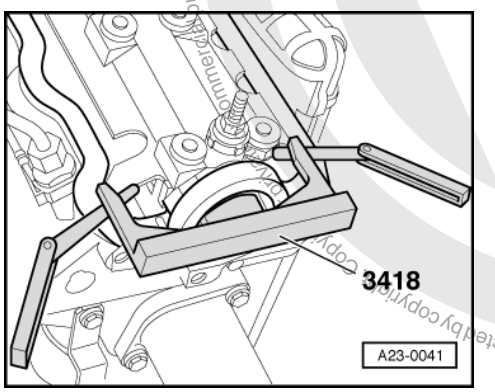

- -> Lock camshaft with setting bar 3418.
- Centralize setting bar as follows:
  Turn camshaft so that one end of setting bar contacts the cylinder head. Using feeler gauge establish the gap at the other end of the setting bar. Place a feeler gauge corresponding to half the gap between setting

satelettronica
Protected by copyright. Copyright by Volkswagen AG.

bar and cylinder head. Turn camshaft until the setting bar contacts the feeler gauge. Place a 2nd feeler gauge, of same thickness, at the other end between setting bar and cylinder head.

Note:

The camshaft can also be locked with camshaft bar T10098.

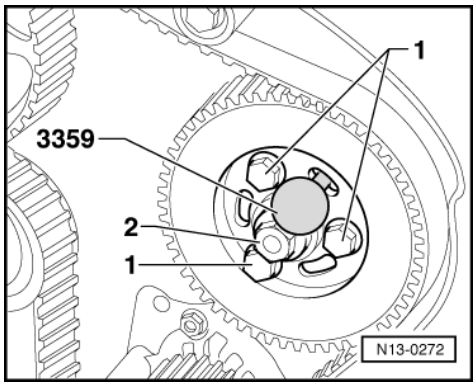

- -> Lock injection pump sprocket with pin 3359.
- Loosen tensioner.
- Take off toothed belt.
- Loosen the camshaft sprocket securing bolts by one full turn. To loosen the camshaft securing bolts, hold camshaft sprocket with counter-hold tool 3036.

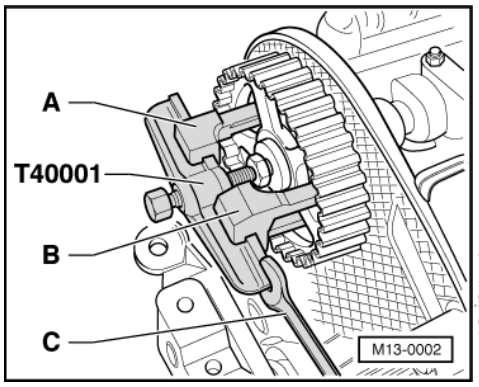

Note:

Never use setting bar 3418 or camshaft bar T10098 as a counter-hold when loosening and tightening the camshaft sprocket! Use counter-hold tool 3036.

- -> Place puller T40001 with single leg T40001/2 -A- and double leg T40001/3 -B- centrally on the camshaft sprocket and pull it off.

  Use an open ended spanner -C- to counter-hold when doing this.

- Take off camshaft sprocket.
- First remove bearing caps 5, 1 and 3. Then loosen bearing caps 2 and 4 alternately and diagonally.

Copyright by Volkswagen AG. Volkswagen AG does not guarantee or accept any liability with respect to the correctness of information in this document. Copyright by Volkswagen AG. Protected by copyright. Copying for private or commercial purposes, in part or in whole, is not permitted unless authorised by Volkswagen AG.
satelitronica

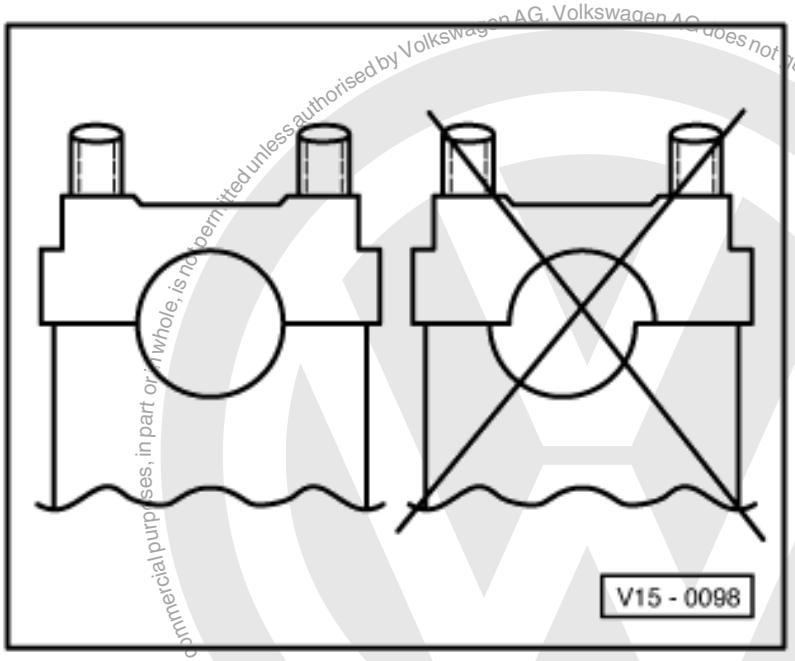

Protected by copyright. Copying for private or commercial purposes, in part or in whole, is not permitted unless authorised by Volkswagen AG. Volkswagen AG does not guarantee or accept any liability with respect to the correctness of information in this document. Copyright by Volkswagen AG.

satelettronica

Installing

Notes:

- When installing the camshaft No. 1 cylinder cams must point upwards.
- -> When installing the bearing cap note offset, before installing camshaft fit bearing caps and determine fitting position.

- Oil camshaft running surfaces.
- Tighten bearing caps 2 and 4 alternately and diagonally to
  20 Nm.
- Install bearing caps 5, 1 and 3 and also tighten to
  20 Nm.
- Locate bearing cap 5 by tapping lightly on the end of the camshaft.
- Install camshaft sprocket.
- Install and tension toothed belt => Page 60 .

Note:

When new tappets have been installed the engine must not be started for about 30 minutes. Hydraulic compensation elements must settle (otherwise valves will strike pistons).

2.7 - Checking hydraulic bucket tappets

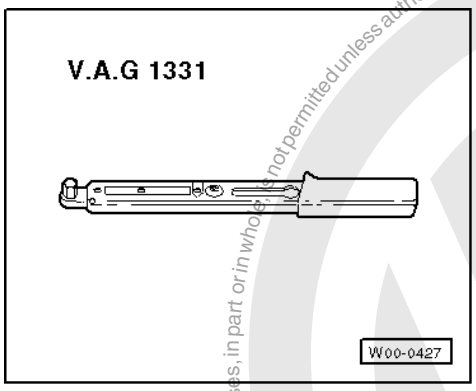

Special tools, workshop equipment, testers, measuring instruments and auxiliary items required

- V.A.G 1331 Torque wrench (5...50 Nm)

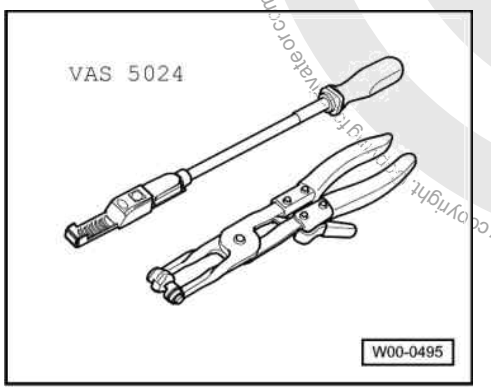

- VAS 5024 Assembly tool for spring-type clips
- Feeler gauge
- Wood or plastic wedge

Notes:

- Renew defective tappet complete (cannot be adjusted or repaired).
- Irregular valve noises when starting engine are normal.

Test conditions

- Engine oil temperature min. 80 °C

Test sequence

- Start engine and run until engine oil temperature is min. 80 °C.
- Increase engine speed to about 2500 rpm for approx. 2 minutes.

If the hydraulic tappets are still noisy, locate defective tappets as follows:

Engine codes AGP, AQM, AYQ

- Remove intake manifold upper part.

Engine codes AGR, ALH, ASV

- Remove connecting pipe between charge air cooler and intake manifold/pressure hose.

Volkswagen AG / Volkswagen AG does not guarantee or accept any liability with respect to the correctness of information in this document. Copyright by Volkswagen AG. Protected by copyright. Copying for private or commercial purposes, in part or in whole, is not permitted unless authorised by Volkswagen AG.
satelettronica

Continued for all engine codes

- Remove cylinder head cover.
- Rotate crankshaft clockwise, until cam of the tappet to be checked is pointing upwards.
- Determine play between cam and bucket tappet.
- If the play is in excess of 0.1 mm, renew bucket tappet. If the play is less than 0.1 mm or no play, proceed with check as follows:

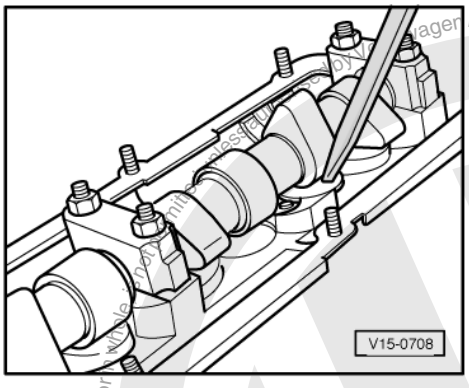

- -> Press tappet down with a wooden or plastic wedge. If free travel in excess of 1 mm is felt before tappet contacts valve, renew
  tappet.

Note:

After installing new tappets the engine must not be started for approx. 30 minutes. Hydraulic compensation elements must settle (otherwise valves will strike pistons).

Protected by copyright. Copying for private or commercial purposes, in part or in whole, is not permitted unless authorised by Volkswagen AG. Volkswagen AG does not guarantee or accept any liability with respect to the correctness of information in this document. Copyright by Volkswagen AG.

satelettronica

17 - Lubrication

1 - Removing and installing parts of the lubrication system

1.1 - Removing and installing parts of the lubrication system

Notes:

- If large quantities of metal particles or other deposits (caused, for example, by partial seizure of the crankshaft or conrod bearings) are found in the engine oil when performing repairs, clean the oil passages thoroughly and renew the oil cooler in order to prevent further damage from occurring later.
- The oil level must not be above the max. mark - danger of damage to catalyst!

Checking oil pressure => Page 105

Oil system capacity1):

with oil filter 4.5 ltrs.

1) Up-to-date figures:

=> Exhaust emissions test binder

Engine oil specifications:

Naturally aspirated Diesel (engine codes AGP, AQM, AYQ):
Only use engine oil conforming to VW standard 500 00, 501 01, 502 00, 505 00 or 505 01 or multi-grade oil conforming to ACEA B3/B4.

Turbo diesel (engine codes AGR, ALH, ASV):
Only use engine oil conforming to VW standard 505 00 or 505 01.

Protected by copyright. Copying for private or commercial purposes, in part or in whole, is not permitted unless authorised by Volkswagen AG. Volkswagen AG does not guarantee or accept any liability with respect to the correctness of information in this document. Copyright by Volkswagen AG.
satelettronica

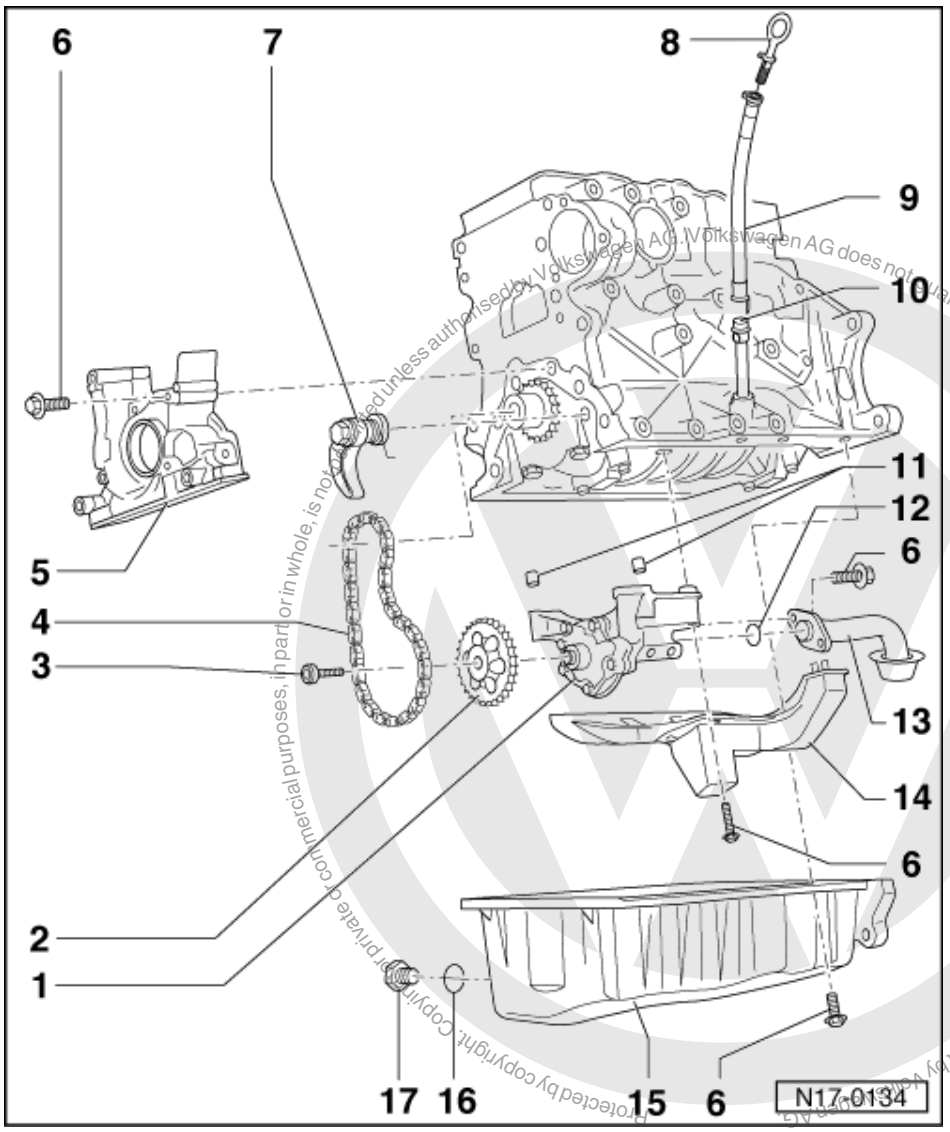

Protected by copyright. Copyright by Volkswagen AG. Volkswagen AG does not guarantee or accept any liability with respect to the correctness of information in this document. Copyright by Volkswagen AG. Protected by copyright. Copying for private or commercial purposes, in part or in whole, is not permitted unless authorised by Volkswagen AG.

satelettronica

Part I

Part II Dismantling oil filter bracket

=> Page 96

Part III removing and installing oil supply pipe => page 100

1 **Oil pump**
- With pressure relief valve of 12 bar
- Before installing, check that both dowel sleeves for centralizing oil pump/cylinder head are fitted
- Renew if running surfaces and gears are scored

2 **Chain sprocket for oil pump**

3 **25 Nm**

4 **Chain**

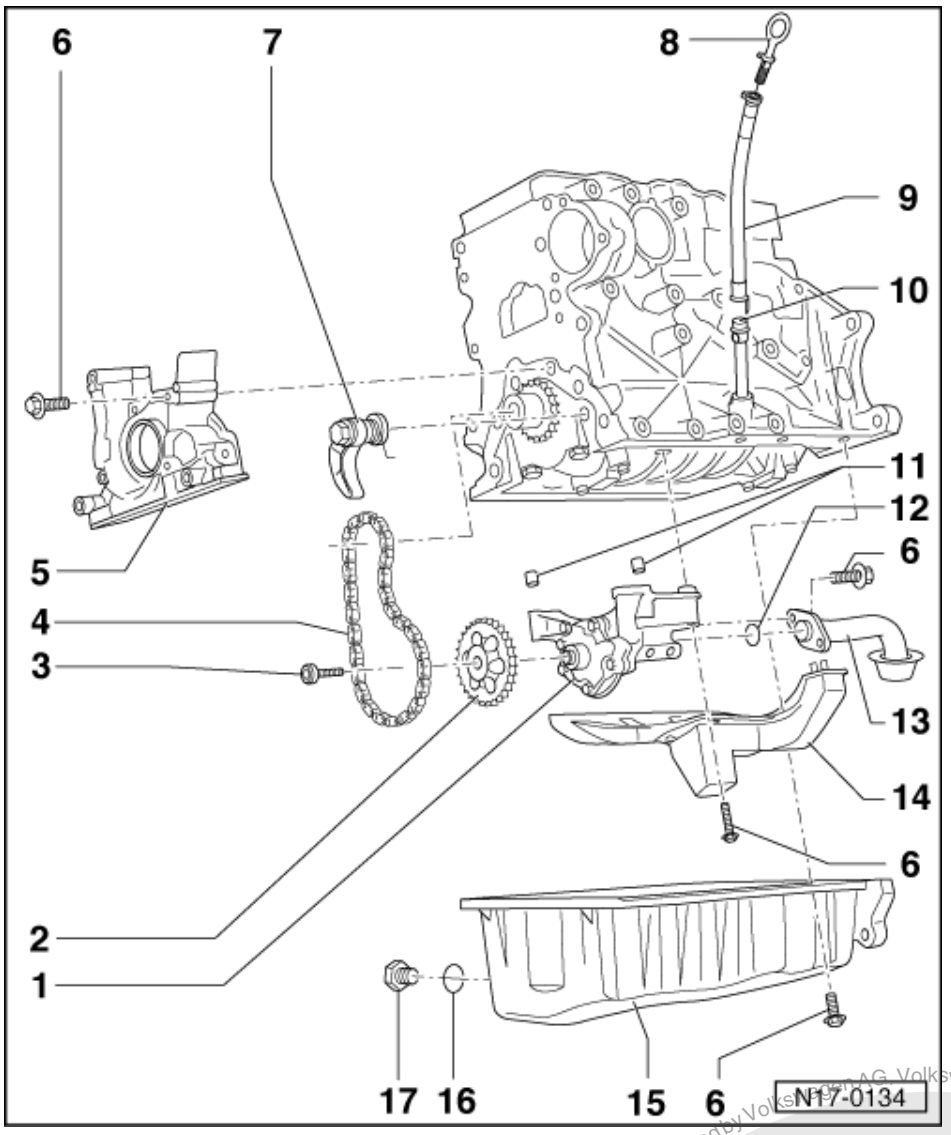

5 Sealing flange
- With oil seal
- Removing and installing
  => Page 36
- Insert with silicone sealant
  D 176 404 A2
  => Page 36
- Take note of different types of seal
- PTFE oil seal without inner coil spring
- Renewing crankshaft oil seal - pulley end => Page 32

6 15 Nm

7 Chain tensioner with tensioning rail, 15 Nm
- When installing, pretension spring and fit

satelettronica
Copyright by Volkswagen AG. Volkswagen AG does not guarantee or accept any liability with respect to the correctness of information in this document. Copying for private or commercial purposes, in part or in whole, is not permitted unless authorised by Volkswagen AG.

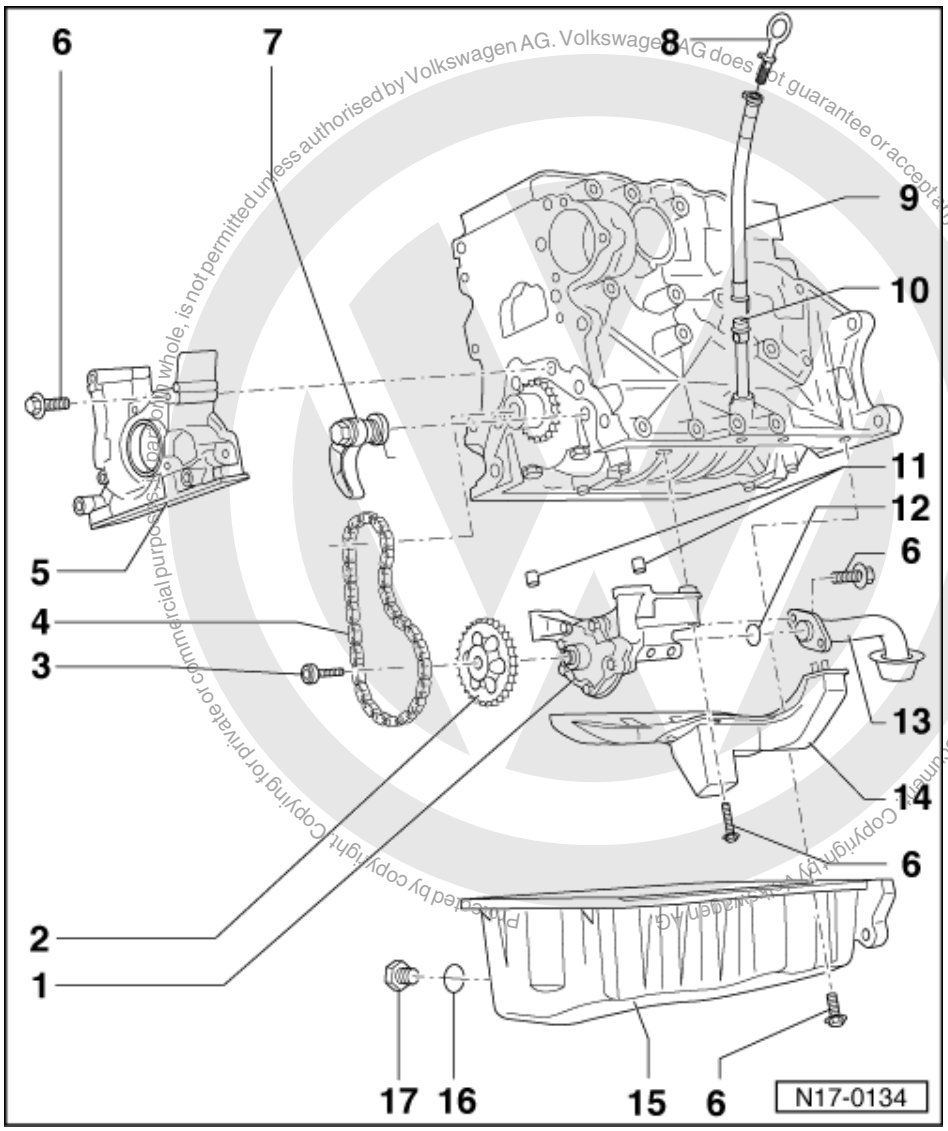

Copyright © Volkswagen AG. Volkswagen AG does not guarantee or accept any liability with respect to the correctness of information in this document. Copying for private or commercial purposes, in whole or in part, is not permitted unless authorised by Volkswagen AG.
Printed by copyright holder

8 Dipstick
- The oil level must not be above the max. mark!
- Markings=> Page 99 , Fig. 1
- Note fitting location:
  Lug on dipstick must be located opposite to lug on dipstick tube

9 Guide
- Pull off to extract oil

10 Guide tube

11 Dowel sleeves

12 O-ring
- Renew

13 Suction pipe
- Clean strainer if soiled

satelettronica

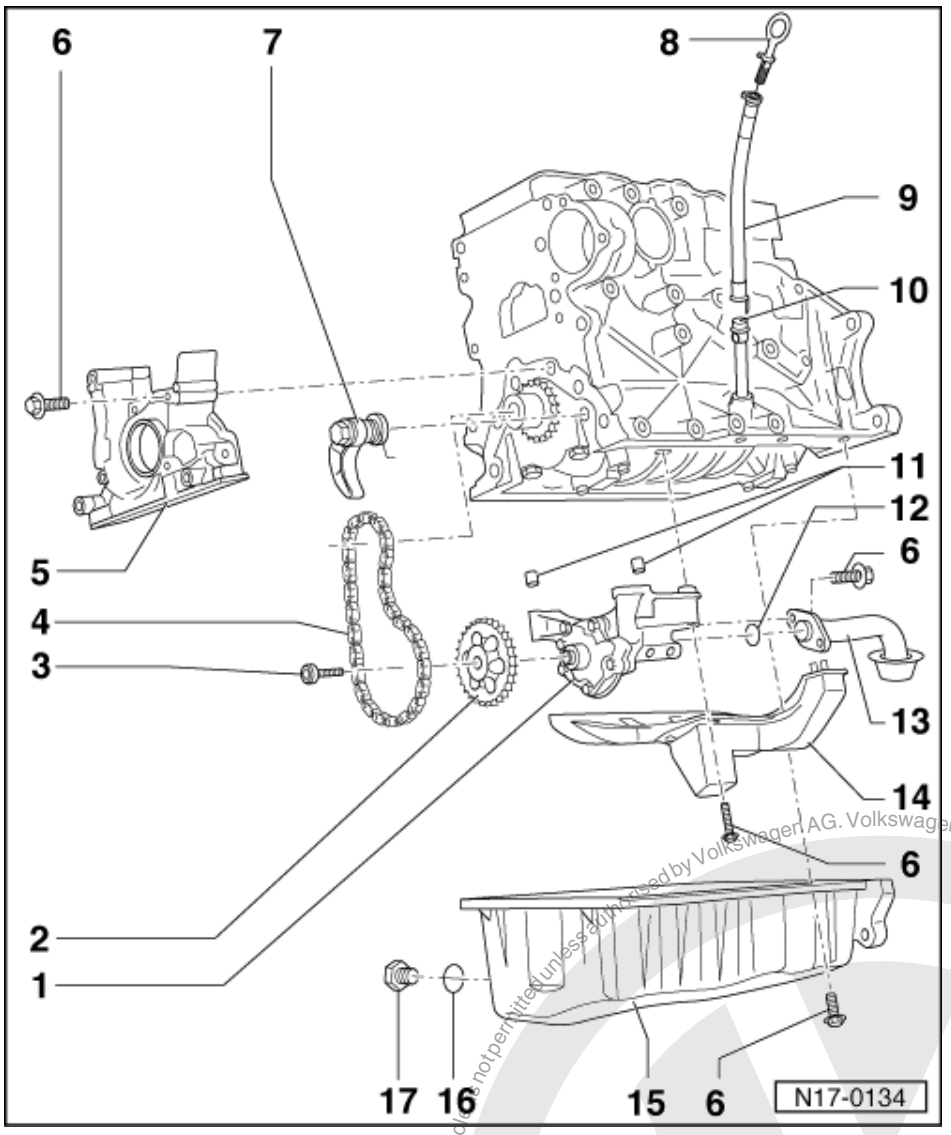

14 Baffle plate

15 Sump

- Clean sealing surface before installing
- Install with silicone sealant
  D 176 404 A2
  => Page 102

16 Seal

- Renew

17 Oil drain plug, 30 Nm

- Renew plug with attached seal

Protected by copyright. Copying for private or commercial purposes, in part or in whole, is not permitted unless authorised by Volkswagen AG. Volkswagen AG does not guarantee or accept any liability with respect to the correctness of information in this document. Copyright by Volkswagen AG.
satelettronica

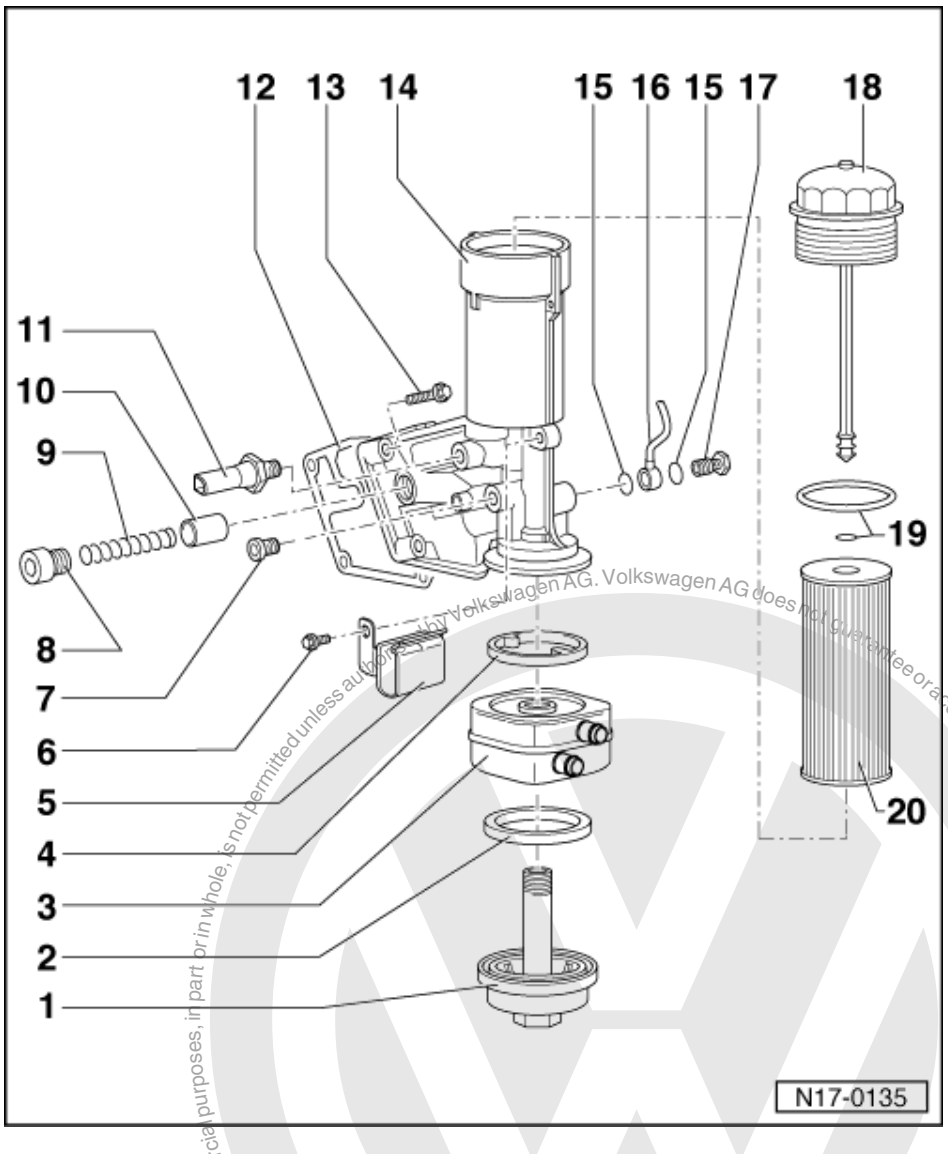

Part II

1 Sealing plug, 25 Nm
2 Gasket
- Renew

3 Oil cooler
- Ensure clearance to adjacent components
- See note
  => Page 91

4 Gasket
- Renew
- Fit into groove on oil cooler

5 Bracket
6 10 Nm

Protected by copyright. Copying for private or commercial purposes, in part or in whole, is not permitted unless authorised by Volkswagen AG. Volkswagen AG does not guarantee or accept any liability with respect to the correctness of information in this document. Copyright by Volkswagen AG.
satelettronica

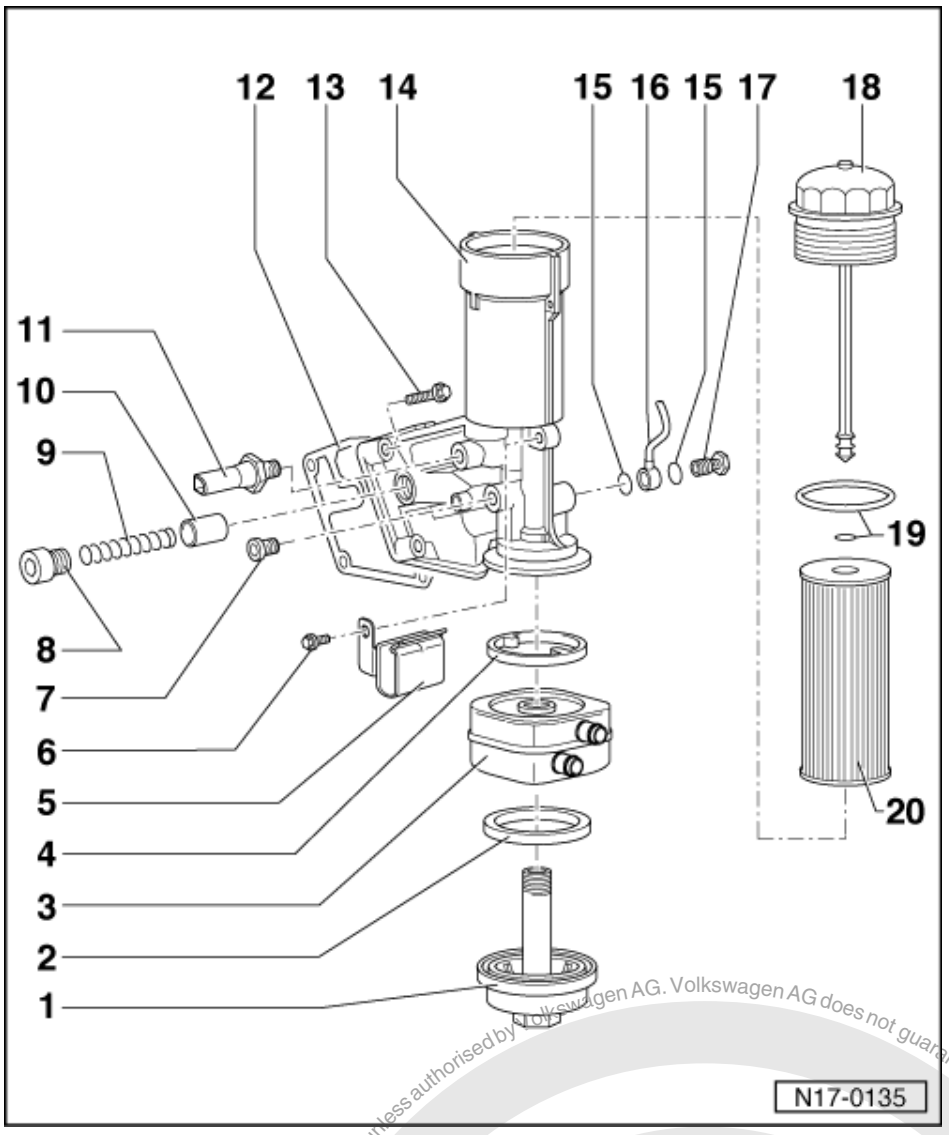

7 Sealing plug, 10 Nm
- If sealing ring is leaking nip open and replace.

8 Sealing plug, 40 Nm

9 Spring
- For pressure relief valve, approx. 5 bar

10 Piston
- For pressure relief valve, approx. 5 bar

11 0.7 bar oil pressure switch (F1), 25 Nm
- If sealing ring is leaking nip open and replace.
- Checking => Page 105

12 Gasket
- Renew

13 15 Nm + 1/4 turn (90 °) further
- Renew
- First fit upper left and lower right bolt, then tighten the four bolts diagonally

Protected by copyright. Copying for private or commercial purposes, in whole or in part, is not permitted unless authorised by Volkswagen AG. Volkswagen AG does not guarantee or accept any liability with respect to the correctness of information in this document. Copyright by Volkswagen AG.
satelettronica

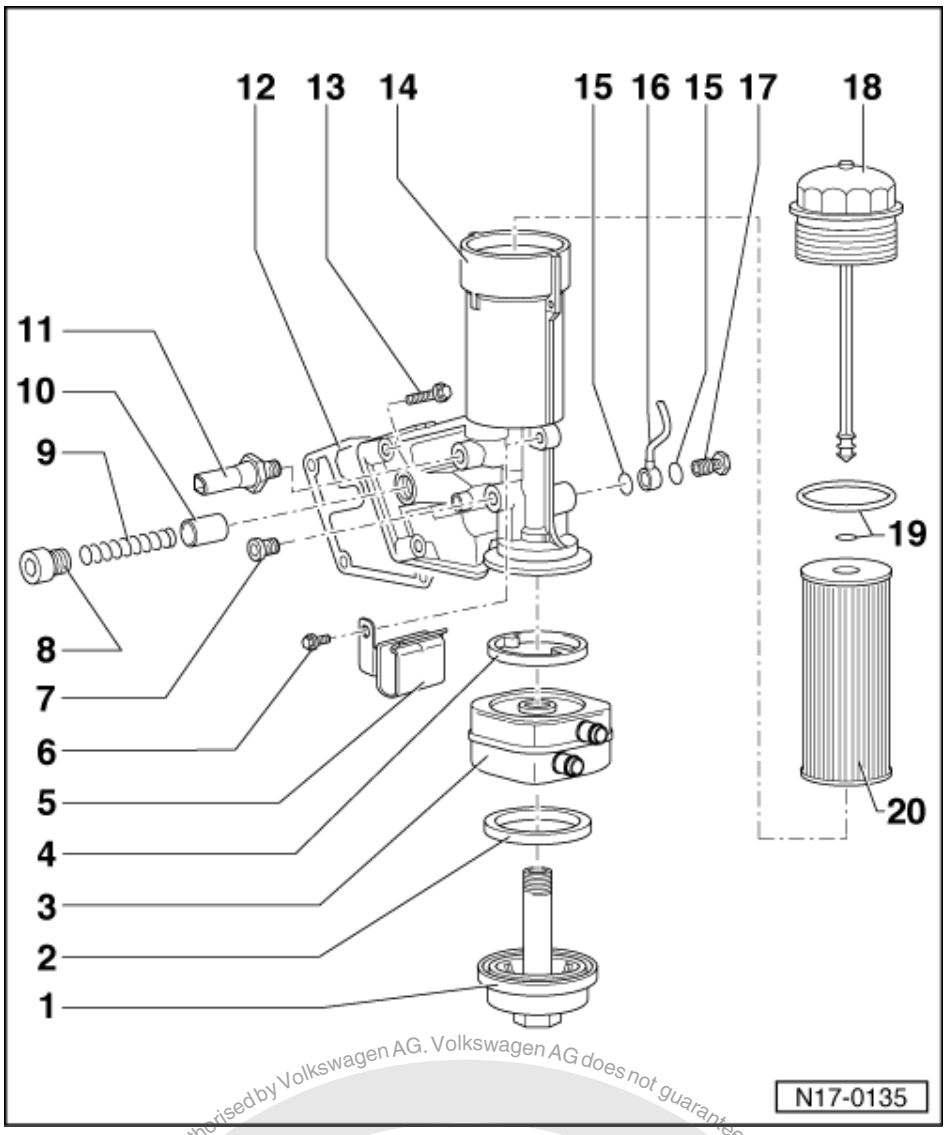

14 Oil filter bracket

15 Seal
- Renew
- Only engine codes AGR, ALH, ASV

16 Oil supply pipe
- To turbocharger
- Only engine codes AGR, ALH, ASV

17 Banjo bolt
- Only engine codes AGR, ALH, ASV
- Tightening torque => page 100 , item 4

18 Sealing cap, 25 Nm
- Loosen and tighten with oil filter spanner 3417

19 O-ring
- Renew

20 Oil filter element

Protected by copyright. Copying for private or commercial purposes, in part or in whole, is not permitted unless authorised by Volkswagen AG. Volkswagen AG does not guarantee or accept any liability with respect to the correctness of information in this document. Copyright by Volkswagen AG.

satelettronica

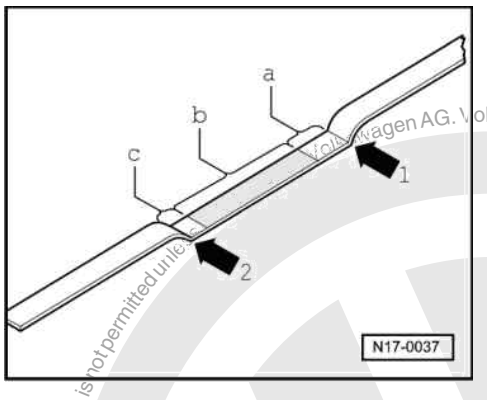

-> Fig. 1 Markings on dipstick

1 - max. mark
2 - min. mark
a - Area above hatched field up to max. mark: Do not replenish with engine oil!
b - Oil level within hatched field: can be replenished with engine oil
c - Area from min. mark up to hatched field: replenish with max. 0.5 ltr. of engine oil!

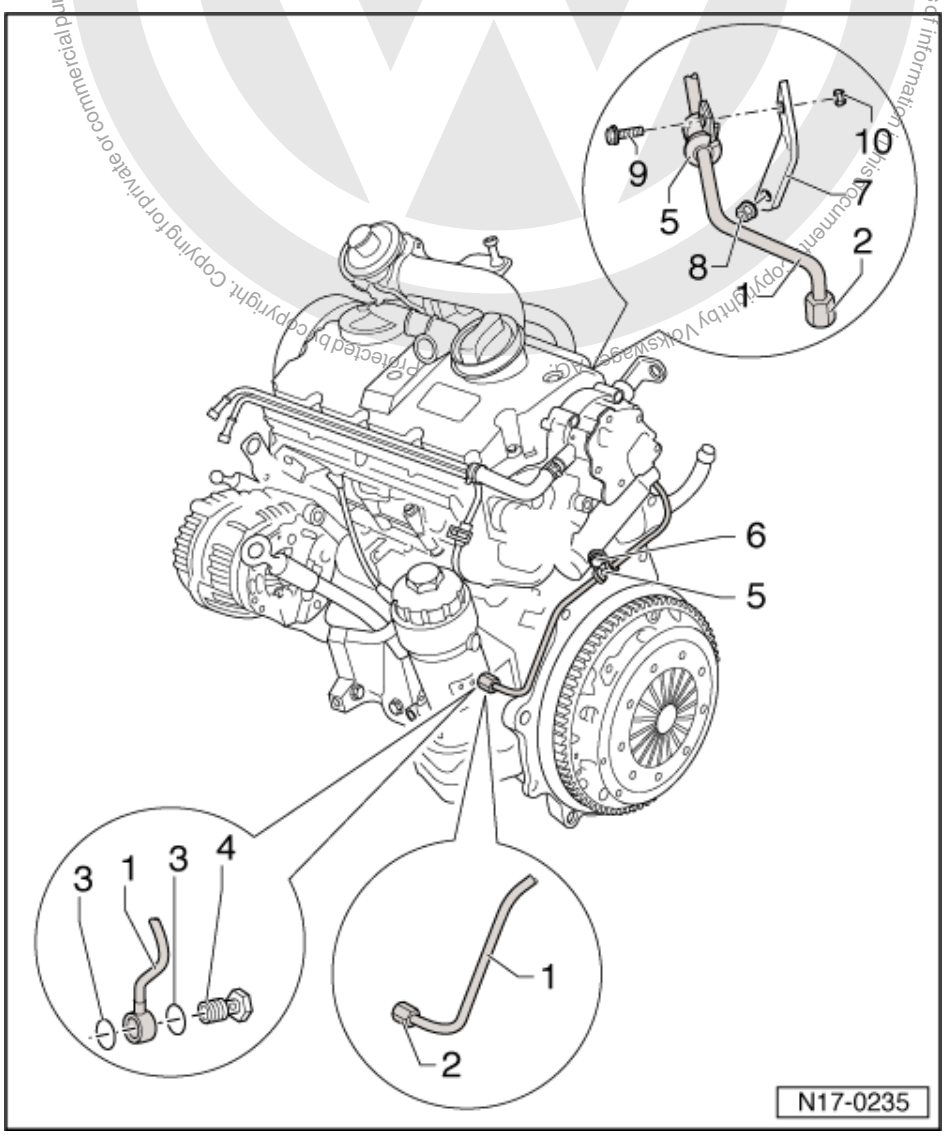

Volkswagen AG. Volkswagen AG does not guarantee or accept any liability with respect to the correctness of information. This document, in part or in whole, is not permitted unless Volkswagen AG. Copyright by Volkswagen AG. Protected by copyright. Copying for private or commercial purposes, in part or in whole, is not permitted unless
satelettronica

Part III

Assembly overview

1 Oil supply pipe
- To turbocharger

2 Union nut, 22 Nm
- When loosening and tightening counter-hold connection

3 Seal
- Renew

4 Banjo bolt, 25 Nm

5 Clip

6 10 Nm

7 Bracket

8 25 Nm
- Renew

9 10 Nm

10 10 Nm

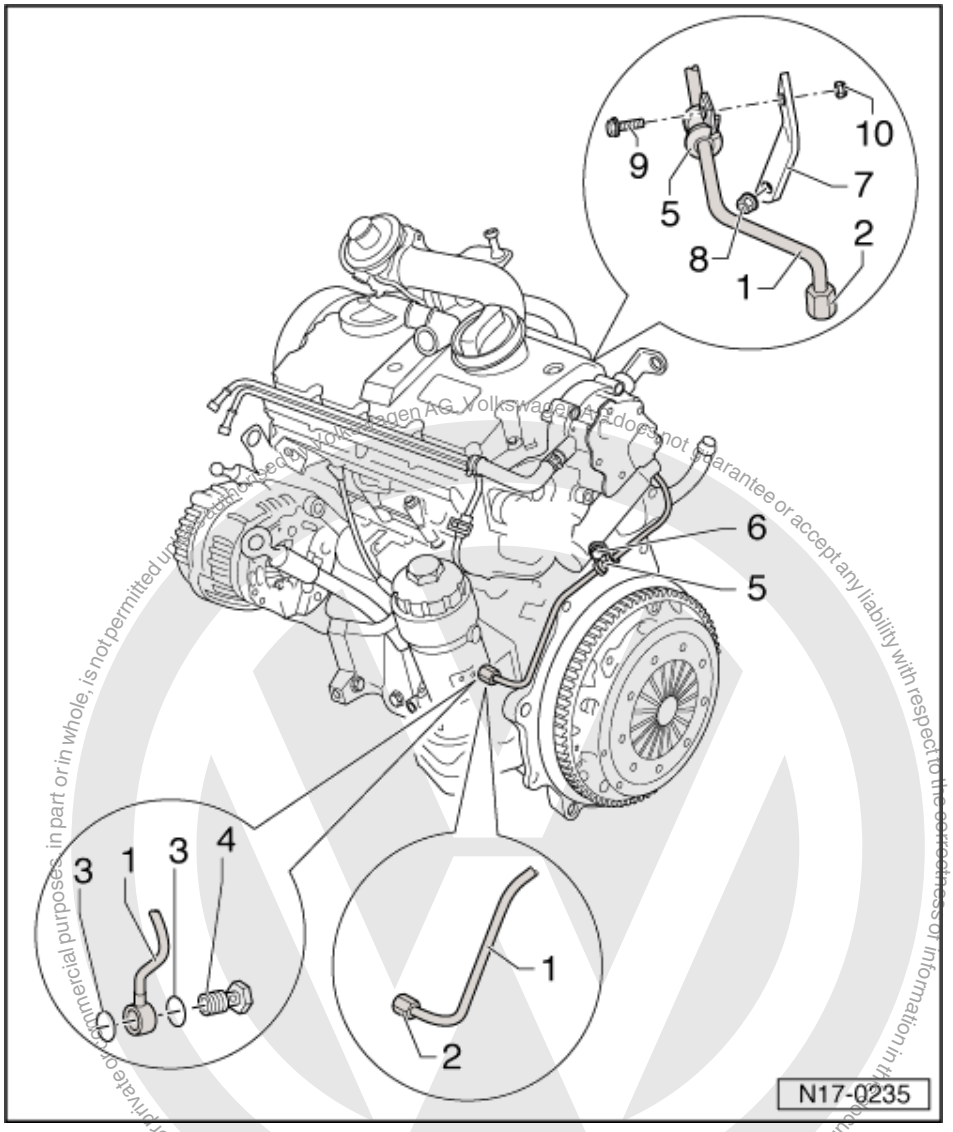

Protected by copyright. Copying for private or commercial purposes, in part or in whole, is not permitted unless authorised by Volkswagen AG. Volkswagen AG does not guarantee or accept any liability with respect to the correctness of information in this document. Copyright by Volkswagen AG.

satelettronica

Assembly sequence

Removing

- Remove noise insulation.
- Place drain tank V.A.G 1306 underneath.
- Remove air cleaner housing.
- Remove union nut -2- or banjo bolt -4- from oil filter bracket.
- Remove bolt -6-.
- Remove union nut -2- from exhaust turbocharger.
- Remove bolt -9- from bracket -7-.
- Remove nut -8- and take off bracket -7-.
- Remove oil supply line -1-.

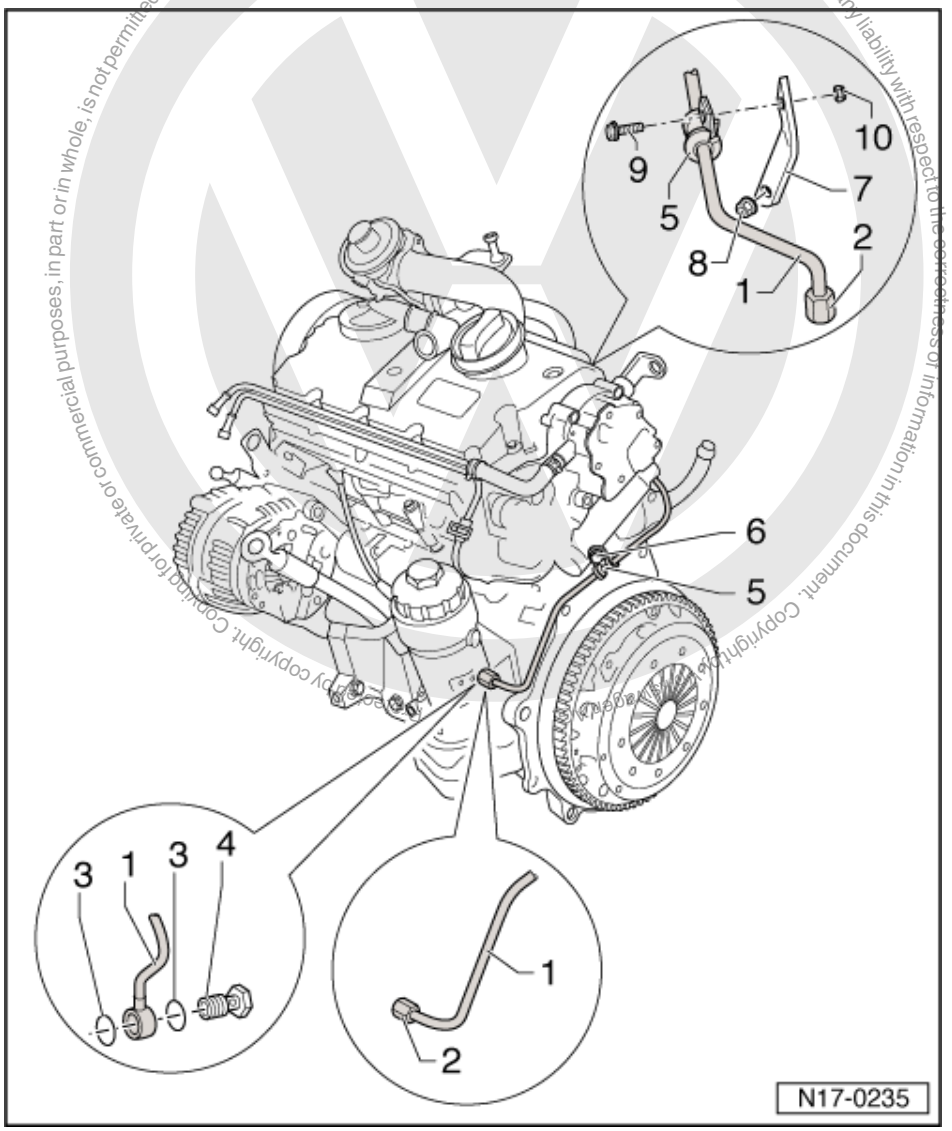

Installing

Install in reverse order. When doing this note the following:

satelettronica

Warning!
The installation of oil supply line must be carried out as described below.

- Screw bracket -7- with nut -8- loosely to exhaust manifold.
- Tighten union nut -2- or banjo bolt -4- on oil filter bracket by hand.
- Tighten union nut -2- on turbocharger by hand.
- Tighten union nut -2- or banjo bolt -4- on oil filter bracket to tightening torque.

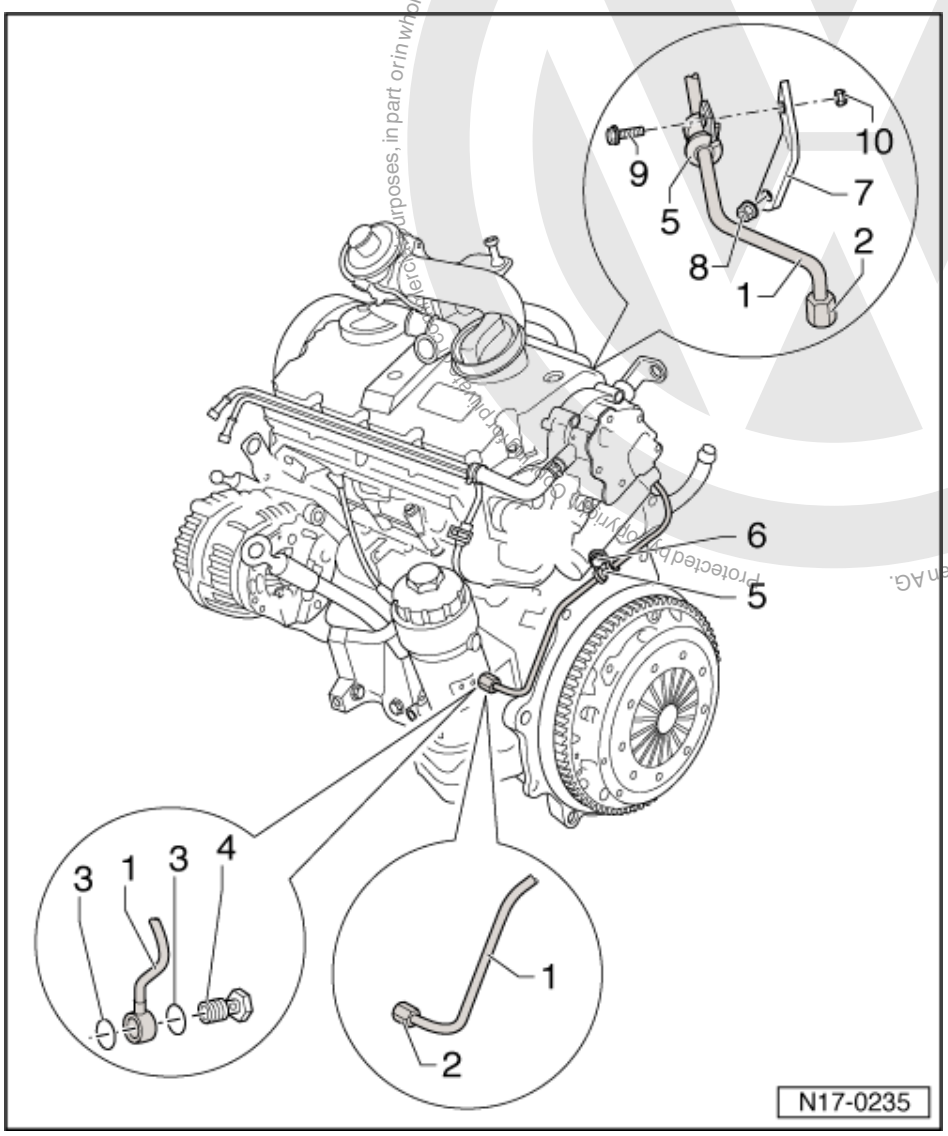

- Tighten union nut -2- on exhaust turbocharger to tightening torque.
- Position clamps -5- on oil supply line.
- Tighten bolts -6- and -9- to tightening torque.
- Tighten nut -8- to tightening torque.

1.2 - Removing and installing sump

Special tools, workshop equipment, testers, measuring instruments and auxiliary items required

- Hand drill with plastic brush
- Silicone sealant D176404 A2

satelettronica

- Flat scraper

Removing

- Remove noise insulation tray.
- Drain engine oil.
- Remove sump.
- Loosen sump with light blows of a rubber headed hammer if necessary.
- Remove sealant residue on cylinder block with a flat scraper.

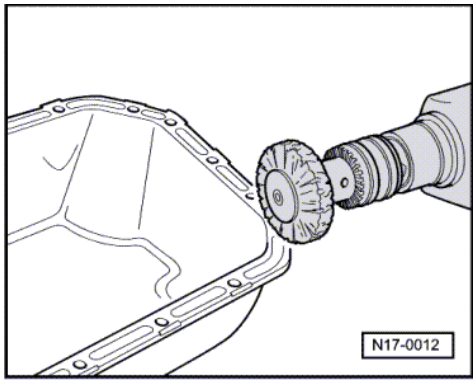

- -> Remove sealant residue on the sump with a rotating brush, e.g. a hand drill with a plastic brush (wear eye protection).
- Clean sealing surface, must be free of oil and grease.

Installing

Notes:

- Note the use by date of the sealant.

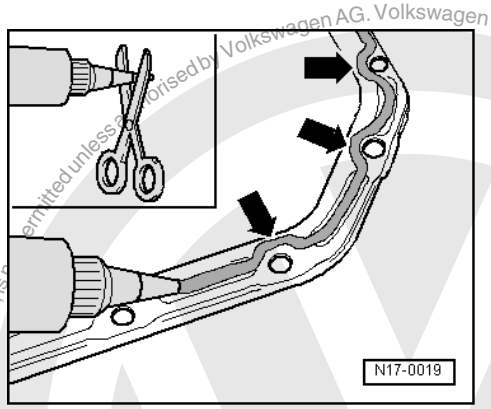

- Sump must be installed within 5 minutes of applying silicone sealing compound.

- -> Cut off tube nozzle at forward marking (nozzle approx. 3 mm ø).
- Apply silicone sealing compound, as shown, to clean sump sealing surface. Sealing compound bead must be.
  - 2...3 mm thick.
  - and run on inside of bolt holes -arrows-.

Note:

The sealing compound bead must not be thicker, otherwise excess sealing compound will enter the sump and may block the oil suction pipe strainer.

Protected by copyright. Copyright by Volkswagen AG.
Copyright by Volkswagen AG. Volkswagen AG does not guarantee or accept any liability with respect to the correctness of information in this document.
Reproduction, even in part or in whole, is permitted unless authorised by Volkswagen AG. Volkswagen AG does not guarantee or accept any liability with respect to the correctness of information in this document. Copyright by Volkswagen AG.
satelettronica

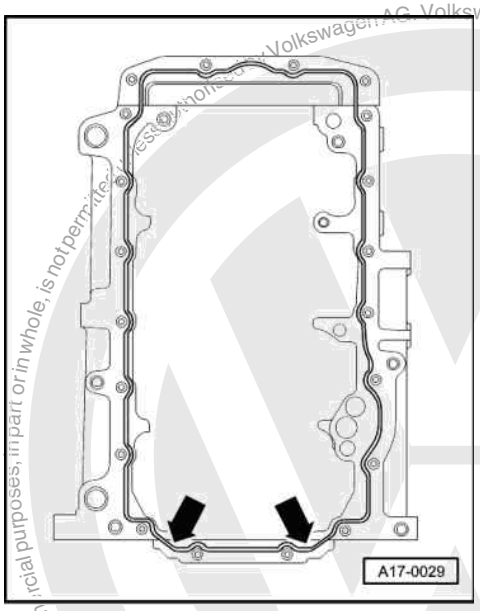

- ➤ Apply silicone sealing bead as shown to the clean sealing surface of the sump. (The illustration shows the position of the sealant bead on the cylinder block).
- Install sump immediately and tighten all sump bolts lightly.

Note:

The sump must be flush with cylinder block.

- Tighten sump bolts to
  15 Nm.
- Tighten sump/gearbox bolts to 45 Nm.

Note:

After installing sump the sealant must be allowed to dry for approx. 30 minutes before engine oil is replenished.

The rest of the assembly is basically a reverse of the dismantling sequence.

Volkswagen AG. Volkswagen AG does not guarantee or accept any liability with respect to the correctness of information in this document. Copyright by Volkswagen AG. Protected by copyright. Copying for private and commercial purposes, in part or in whole, is not permitted unless authorised by Volkswagen AG.

satelettronica

1.3 - Checking oil pressure and oil pressure switch

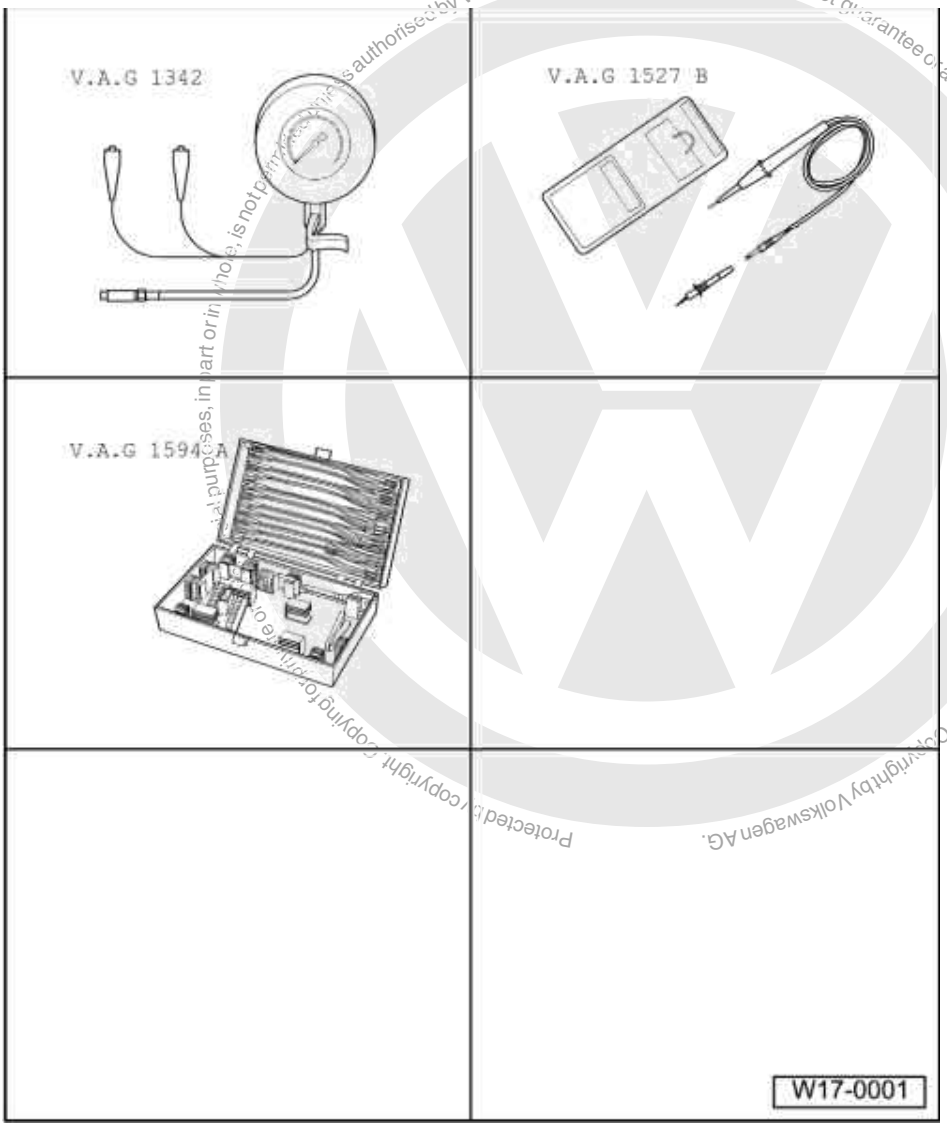

Special tools, workshop equipment, test and measuring appliances and auxiliary items required

- V.A.G 1342 Oil pressure tester
- V.A.G 1527 B Diode test lamp
- V.A.G 1594 A Adapter set

Note:

Functional check and servicing the optical and acoustic oil pressure warning:

=> Current flow diagrams, Electrical fault finding and Fitting locations

Test conditions

- Engine oil level OK, checking => Page 99 , Fig. 1
- Engine oil temperature min. 80 °C

satelettronica

Test sequence

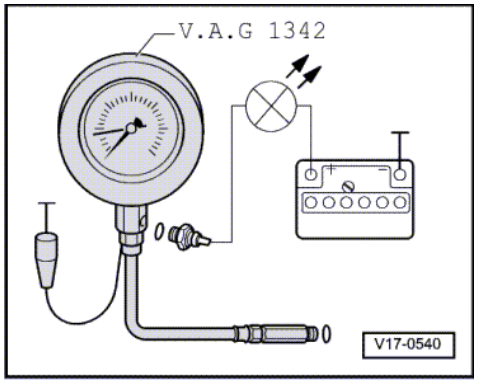

- -> Remove oil pressure switch (F1) and screw into tester.
- Screw tester into the oil filter bracket in place of the oil pressure switch.
- Connect brown wire of tester to earth (-).
- Connect diode test lamp V.A.G 1527 B using auxiliary cables from V.A.G 1594 A to battery positive (+) and oil pressure switch.
  LED must not light up.
- If the LED lights up, renew 0.7 bar oil pressure switch (F1) .

If the LED does not light up:

- Start engine and increase speed slowly.
  At
  0.55...0.85 bar
  the LED must light up, otherwise renew oil pressure switch.
- Increase engine speed further.
  At 2000 rpm and an oil temperature of 80 °C the oil pressure should be at least 2.0 bar.

If the specifications are not obtained:

- Rectify mechanical damage, e.g. bearing damage.
- Renew oil filter bracket with pressure relief valve or renew oil pump.

At higher engine speeds the oil pressure must not exceed
7.0 bar

If the specification is exceeded:

- Check oil galleries.
- If necessary, replace oil filter bracket with pressure relief valve

Protected by copyright. Copying for private or commercial purposes, in part or whole is not permitted unless authorised by Volkswagen AG. Volkswagen AG does not guarantee or accept any liability with respect to the correctness of information in this document. Copyright by Volkswagen AG.
satelettronica

19 - Cooling system

1 - Removing and installing parts of cooling system

1.1 - Removing and installing parts of cooling system

Notes:

- When the engine is warm the cooling system is under pressure. If necessary release pressure before commencing repair work.
- Hoses are secured with spring-type clips. In cases of repair only use spring-type clips.
- Assembly tool VAS 5024 or hose clip pliers V.A.G 1921 are recommended for fitting spring-type clips.

Perform cooling system leakage test with cooling system tester V.A.G 1274 and adapters V.A.G 1274/3 and V.A.G 1274/4.

Parts of cooling system body side =>Page 108 .

Parts of cooling system engine side => 112 .

Draining and filling with coolant=> Page 115 .

Coolant mixture ratios => Page 115 , draining and filling with coolant

Protected by copyright. Copyright for private or commercial purposes, in part or in whole, is not permitted unless authorised by Volkswagen AG. Volkswagen AG does not guarantee or accept any liability with respect to the correctness of information in this document. Copyright by Volkswagen AG.
satelettronica

1.2 - Parts of cooling system body side

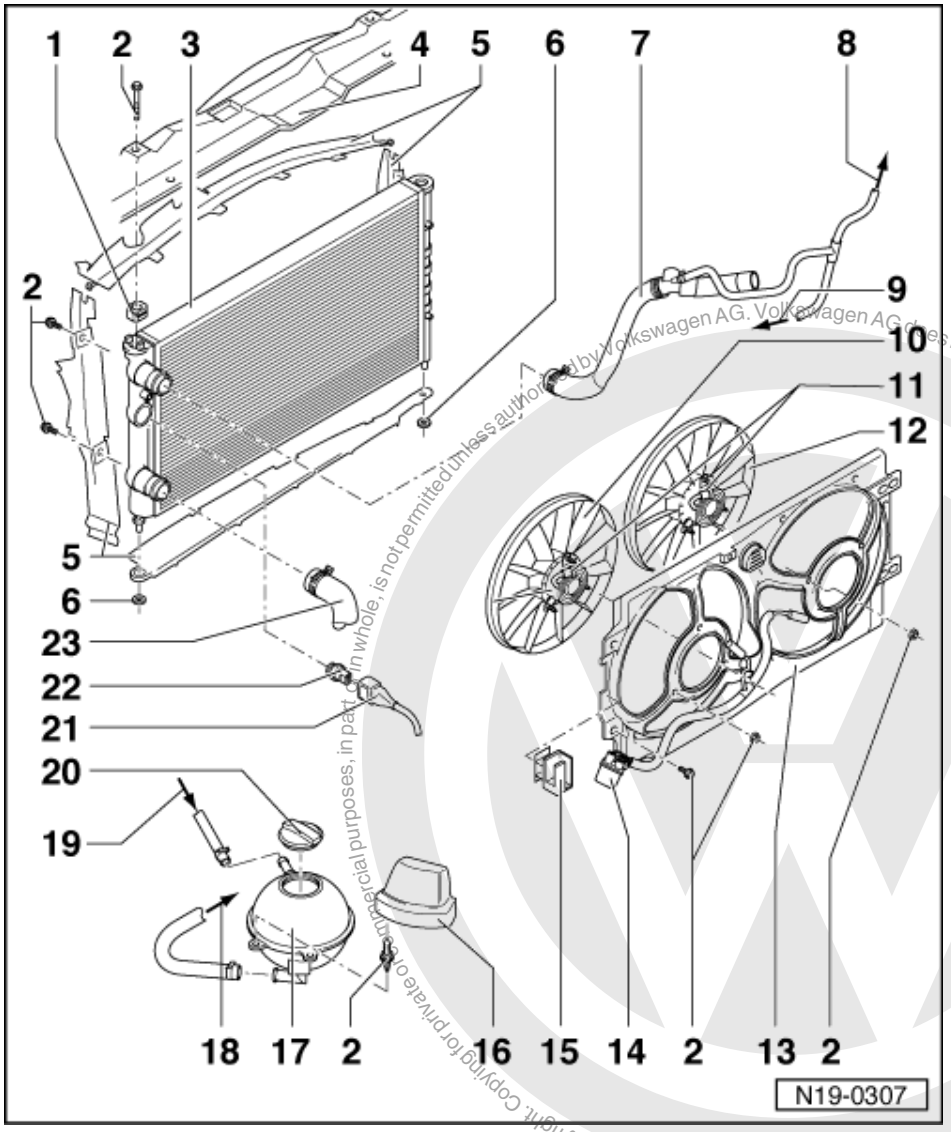

1 Clamp
2 10 Nm
3 Radiator
- Removing and installing =>Page 118
- After replacing renew entire coolant

4 Lock carrier
5 Air ducting
6 Rubber washer
7 Upper coolant hose
- To connecting piece =>Page 113 , Item 13

Protected by copyright. Copying for private or commercial purposes, in part or in whole, is not permitted unless authorised by Volkswagen AG. Volkswagen AG does not guarantee or accept any liability with respect to the correctness of information in this document. Copyright by Volkswagen AG.
satelettronica

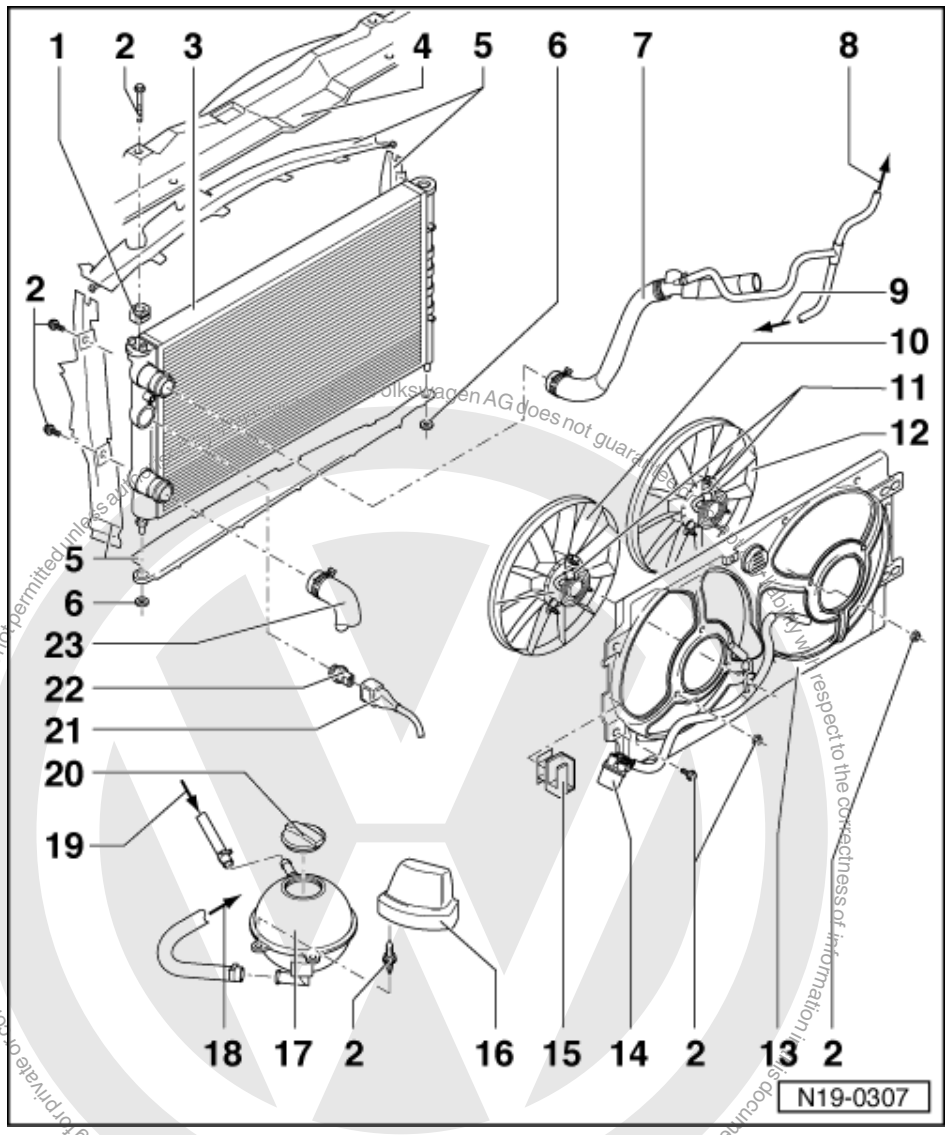

8 To top of expansion tank
- =>Page 110 , Item 19

9 To cylinder head
- =>Page 112 , Item 4

10 Radiator fan
- Removing and installing =>Page 118

11 Connector

12 Additional fan
- Only vehicles with optional equipment

13 Fan ring

14 Connector
- For radiator fan

satelettronica

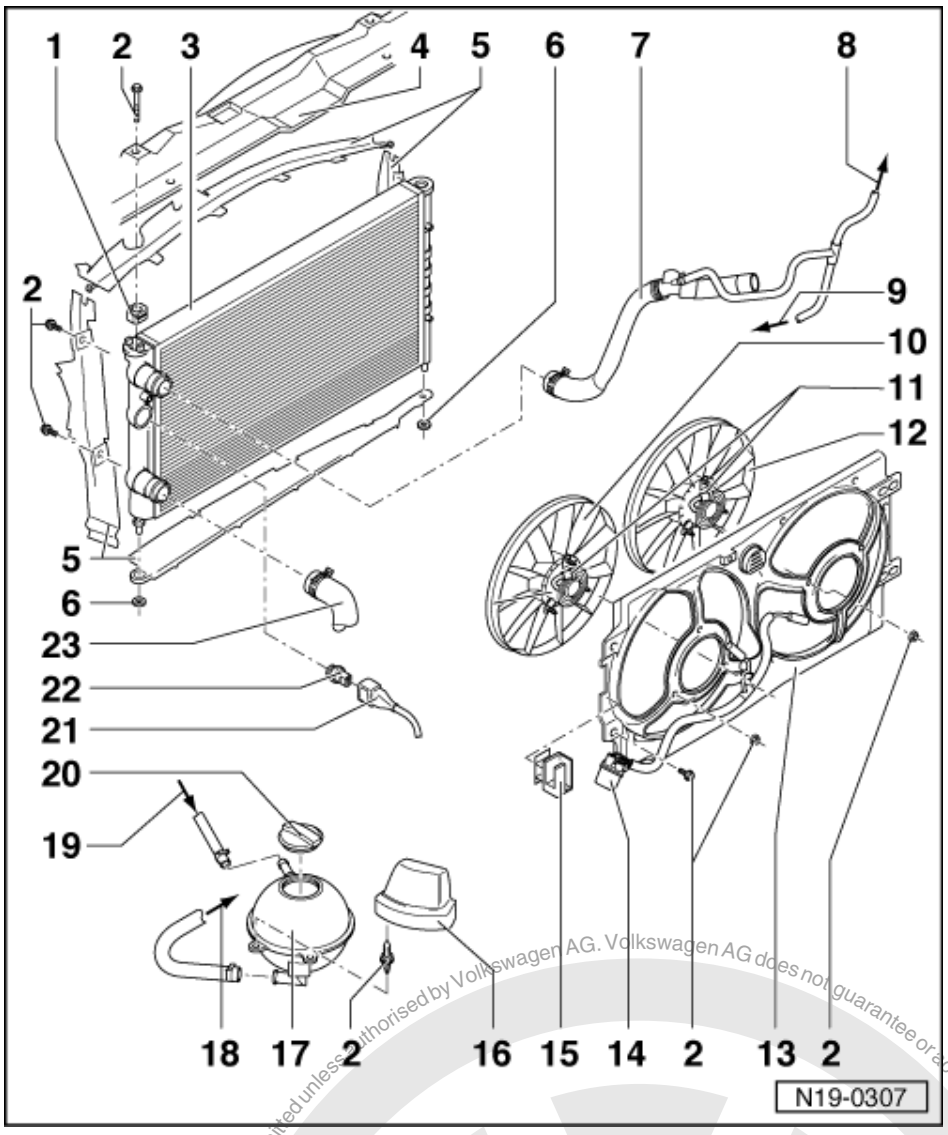

15 Bracket
- For radiator fan connector

16 Cover

17 Expansion tank
- Carry out leak test of cooling system with cooling system tester V.A.G 1274 and adapter V.A.G1274/3

18 To coolant pipe
- =>Page 113 , Item 14

19 From upper coolant hose
- =>Page 109 , Item 8

20 Cap
- Check with cooling system tester V.A.G 1274 and adapter V.A.G 1274/4
- Test pressure 1.4...1.6 bar

Protected by copyright. Copying for private or commercial purposes, in part or in whole, is not permitted unless authorised by Volkswagen AG. Volkswagen AG does not guarantee or accept any liability with respect to the correctness of information in this document. Copyright by Volkswagen AG.
satelettronica

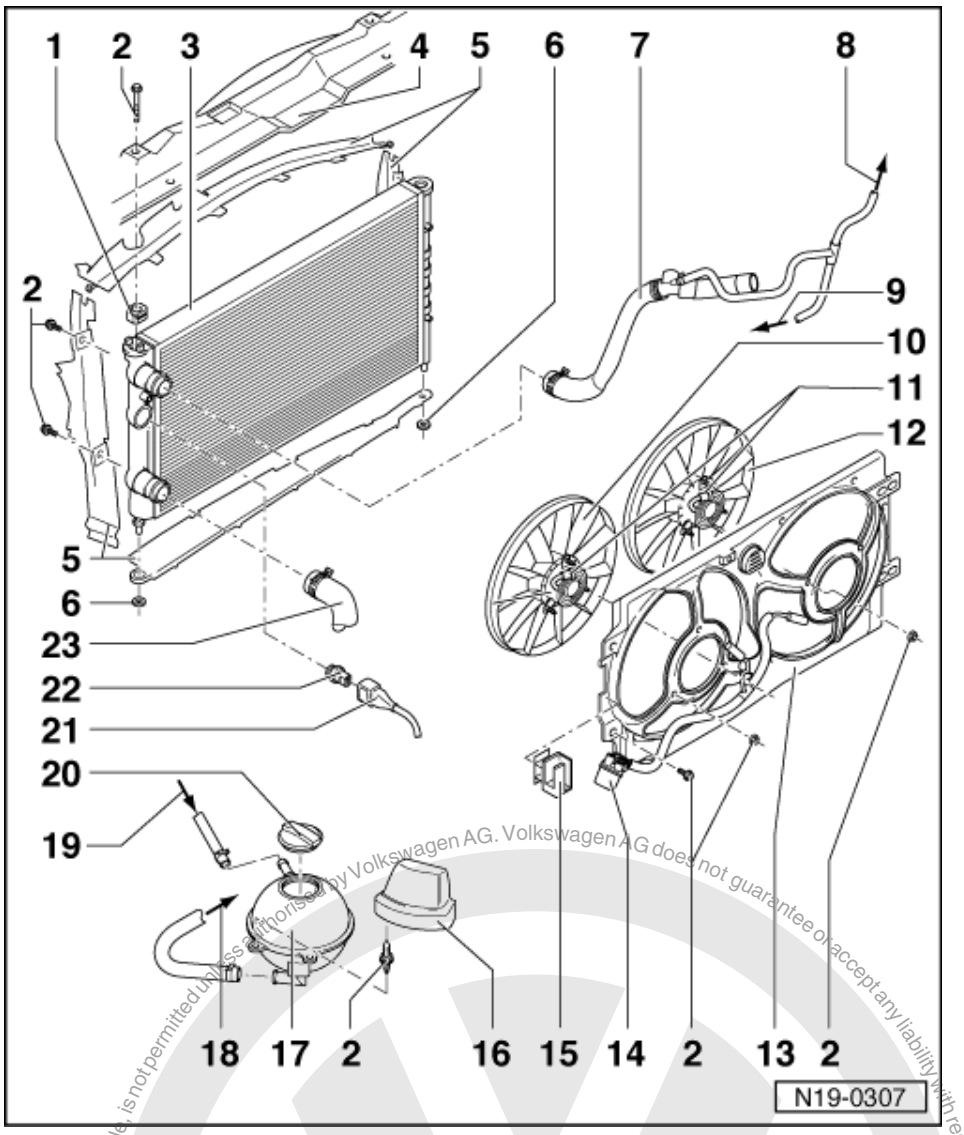

21 Connector
- For thermo-switch

22 Thermo-switch (F18), 35 Nm
- For electric fan
- Switching temperatures:
  Stage 1
  on: 92...97 °C
  off: 84...91 °C
  Stage 2
  on: 99...105 °C
  off: 91...98 °C

23 Lower coolant hose
- From thermostat connecting piece =>Page 114 , Item 19

Protected by copyright. Copying for private or commercial purposes, in whole or in part, is not permitted unless authorised by Volkswagen AG. Volkswagen AG does not guarantee or accept any liability with respect to the correctness of information in this document. Copyright by Volkswagen AG.

satelettronica

1.3 - Parts of cooling system engine side

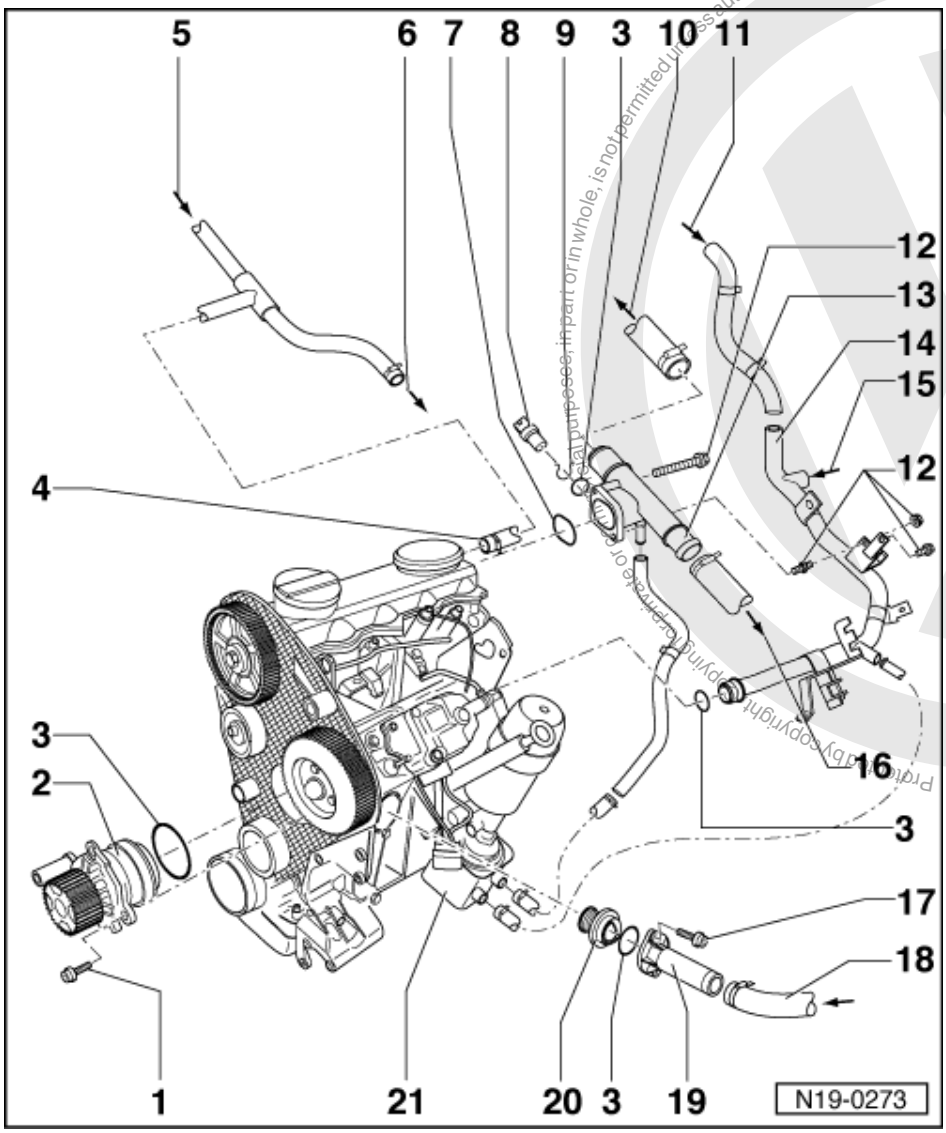

1 15 Nm
2 Coolant pump
- Check for ease of movement
- Note installation position
- Removing and installing
  => Page 120

3 O-ring
- Renew

4 Coolant hose

5 From top of radiator
- => Page 108 , Item 7

6 To top of expansion tank
- => Page 110 , Item 19

7 O-ring
- Check seated securely
- Renew

satelettronica

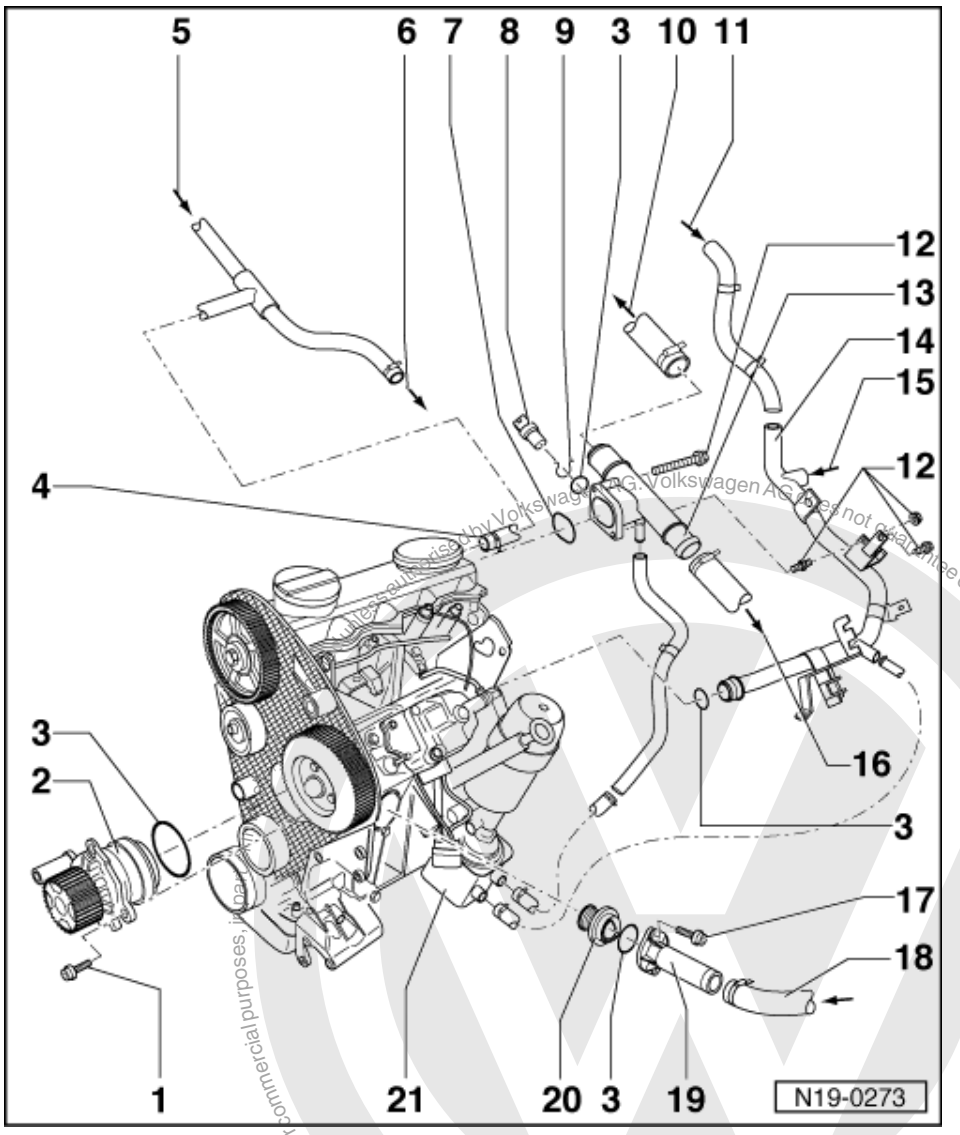

8 Coolant temperature sender (G62)
- Checking:

=> Repair Group 01; Self-diagnosis; Interrogating fault memory Self-diagnosis Interrogating fault memory

- With coolant temperature gauge sender (G2)

9 Retaining clip
- Check seated securely

10 To heat exchanger

11 From heat exchanger

12 10 Nm

13 Connector piece

14 Coolant pipe

15 From bottom of expansion tank
- => Page 110 , Item 18

16 To top of radiator
- => Page 108 , Item 7

satelettronica

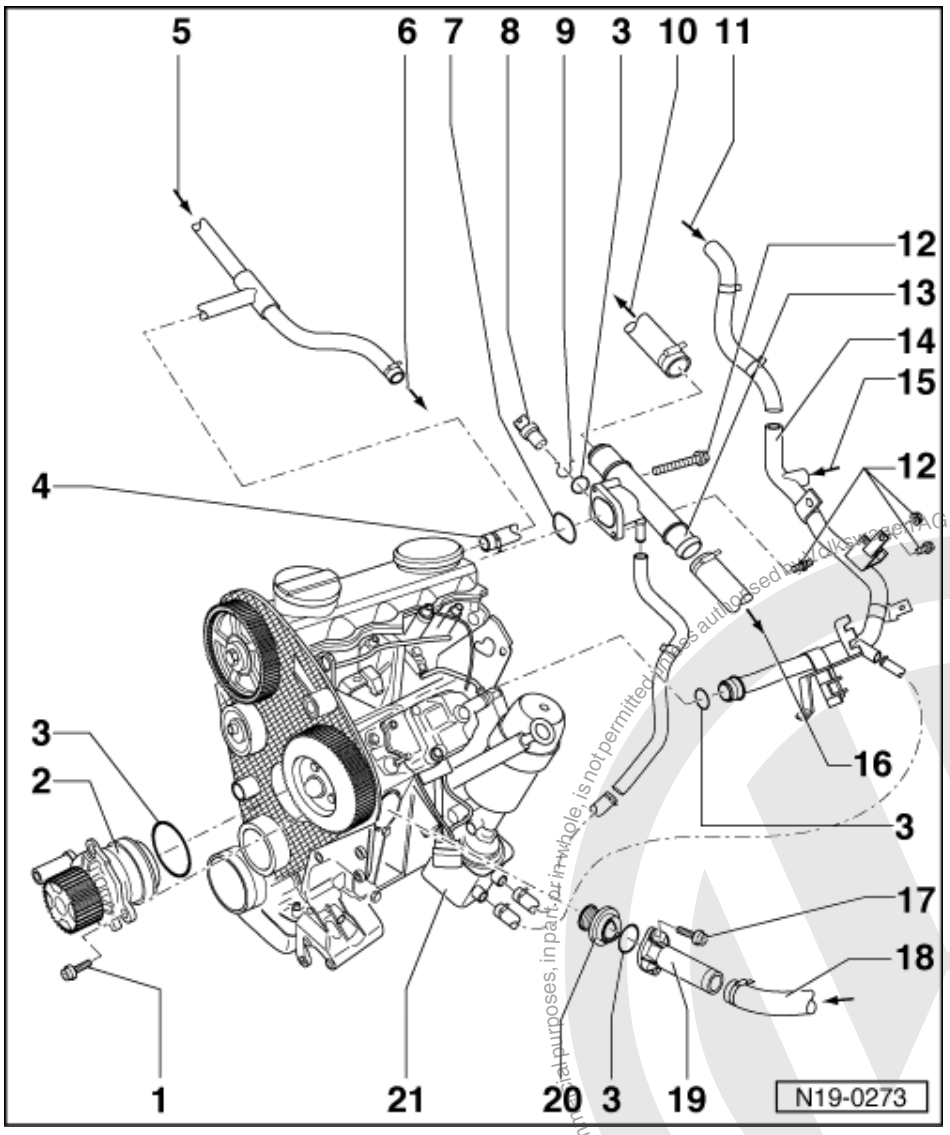

17 15 Nm

18 To bottom of radiator

- => Page 111 , Item 23

19 Connecting piece

- For thermostat

20 Coolant thermostat

- Removing and installing
  => Page 122
- Observe installation position,
  => Page 122 Removing and installing thermostat
- Checking: heat-up thermostat in water
- Opening commences approx. 85 °C
- Ends approx. 105 °C
- Opening lift min. 7 mm

21 Oil cooler

- Removing and installing
  =>Page 96 , Item 3

Protected by copyright. Copying for private or commercial purposes, in part or in whole, is not permitted unless authorised by Volkswagen AG. Volkswagen AG does not guarantee or accept any liability with respect to the correctness of information in this document. Copyright by Volkswagen AG.
satelettronica

1.4 - Draining and filling cooling system

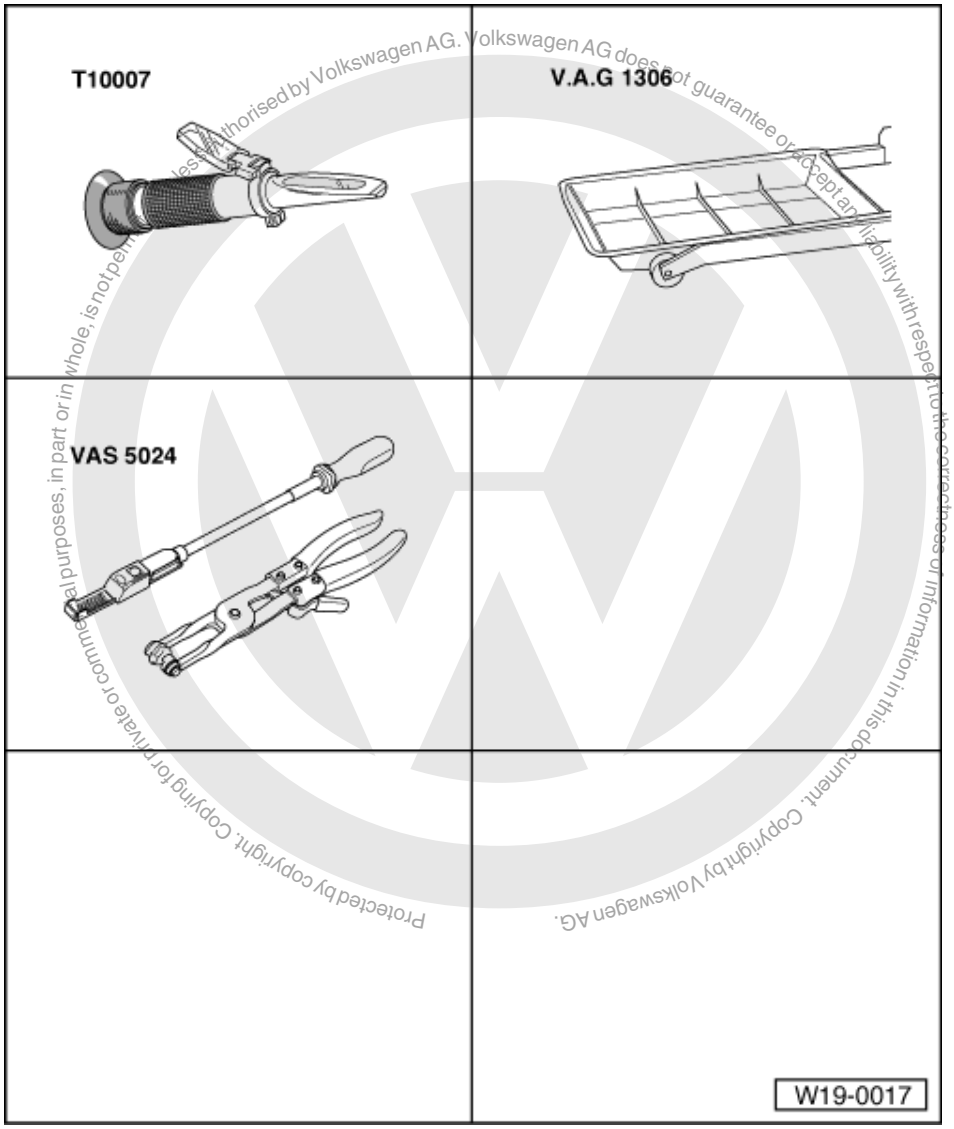

Protected by copyright. Copying for private or commercial purposes, in part or in whole, is not permitted unless authorised by Volkswagen AG. Volkswagen AG does not guarantee or accept any liability with respect to the correctness of information in this document. Copyright by Volkswagen AG.

satelettronica

Special tools, workshop equipment, test and measuring appliances and auxiliary items required

- T10007 Refractometer
- V.A.G 1306 Drip tray
- VAS 5024 Assembly tool for spring-type clamps

Not illustrated:

- VAS 6096 Cooling system charging

Draining

- Open cap on coolant expansion tank.

> Warning !
> Steam can be released when removing the cap from the expansion tank. Cover cap with a cloth and open carefully.

- Remove engine cover.
- Remove noise insulation tray.

- Pull off lower coolant hose at radiator using assembly tool for spring-type clamps VAS 5024.

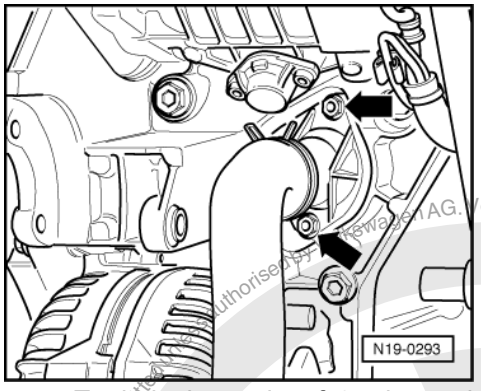

- -> To drain the coolant from the engine, remove the connecting piece with thermostat -arrows- in addition.

Note:

Observe disposal regulations!

Filling

Notes:

- Only use coolant additive G 12 in accordance with TL VW 774 F.
  Distinguishing feature: coloured violet
- G 12 and coolant additives marked "In accordance with TL VW 774 F" prevent frost and corrosion damage, scaling and also raise boiling point of coolant. For this reason the system must be filled all year round with frost and corrosion protection additives.
- G 12 violet (in accordance with TL VW 774 F) can be mixed with the previous coolant additive G 12 red!
- Because of its high boiling point, the coolant improves engine reliability under heavy loads, particularly in countries with tropical climates.
- Protection against frost must be assured to about -25 °C (in arctic climatic countries to about -35 °C).
- The coolant concentration must not be reduced by adding water even in warmer seasons and in warmer countries. The anti-freeze ratio must be at least 40 %.

- If for climatic reasons a greater frost protection is required, the amount of G 12 can be increased, but only up to 60 % (frost protection to about -40 °C), as otherwise frost protection is reduced again and cooling effectiveness is also reduced.
- If radiator, heat exchanger, cylinder head or cylinder head gasket is replaced, do not reuse old coolant.

Recommended mixture ratios:

Frost pro- tection to	Anti-freeze amount	G 121)	Water1)
-25 °C -35 °C	40 % 50 %	2.4 ltr. 3.0 ltr.	3.6 ltr. 3.0 ltr.

1) The quantity of coolant can vary depending upon the vehicle equipment.

- Secure lower coolant hose on connecting piece of radiator.
- Install noise insulation tray.
- Install the connecting piece with thermostat and new O ring =>Page 122 , Removing and installing thermostat.

With cooling system charging unit VAS 6096:

- Screw adapter from V.A.G 1274 suitable for this vehicle onto expansion tank.
- Fill coolant circuit using cooling system charging unit VAS 6096.

=> Operating instructions for cooling system charging unit VAS 6096

Copyright by Volkswagen AG. Volkswagen AG does not guarantee or accept any liability with respect to the correctness of information in this document. Copyright by Volkswagen AG.
satelettronica

Without cooling system charging unit VAS 6096:

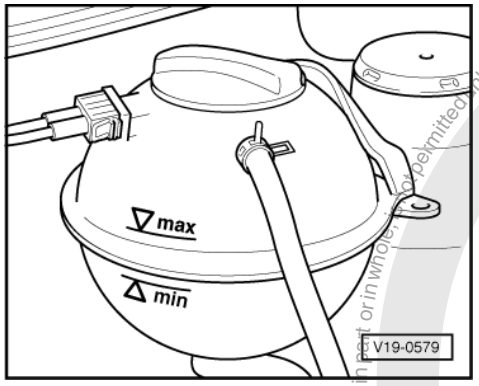

- -> Fill with coolant up to max. mark on expansion tank.
- Fit expansion tank cap.
- Turn off heater control.
- Start engine and maintain an engine speed of about 2000 rpm for approx. 3 minutes.
- Run engine until radiator fan cuts-in.
- Check coolant level and replenish as necessary. When the engine is at normal operating temperature, the coolant level must be on the max. mark, when the engine is cold, between the min. and max. marks.

Protected by copyright. Copying for private or commercial purposes, in part or in whole, is not permitted unless authorised by Volkswagen AG. Volkswagen AG does not guarantee or accept any liability with respect to the correctness of information in this document. Copyright by Volkswagen AG.
satelettronica

1.5 - Removing and installing radiator

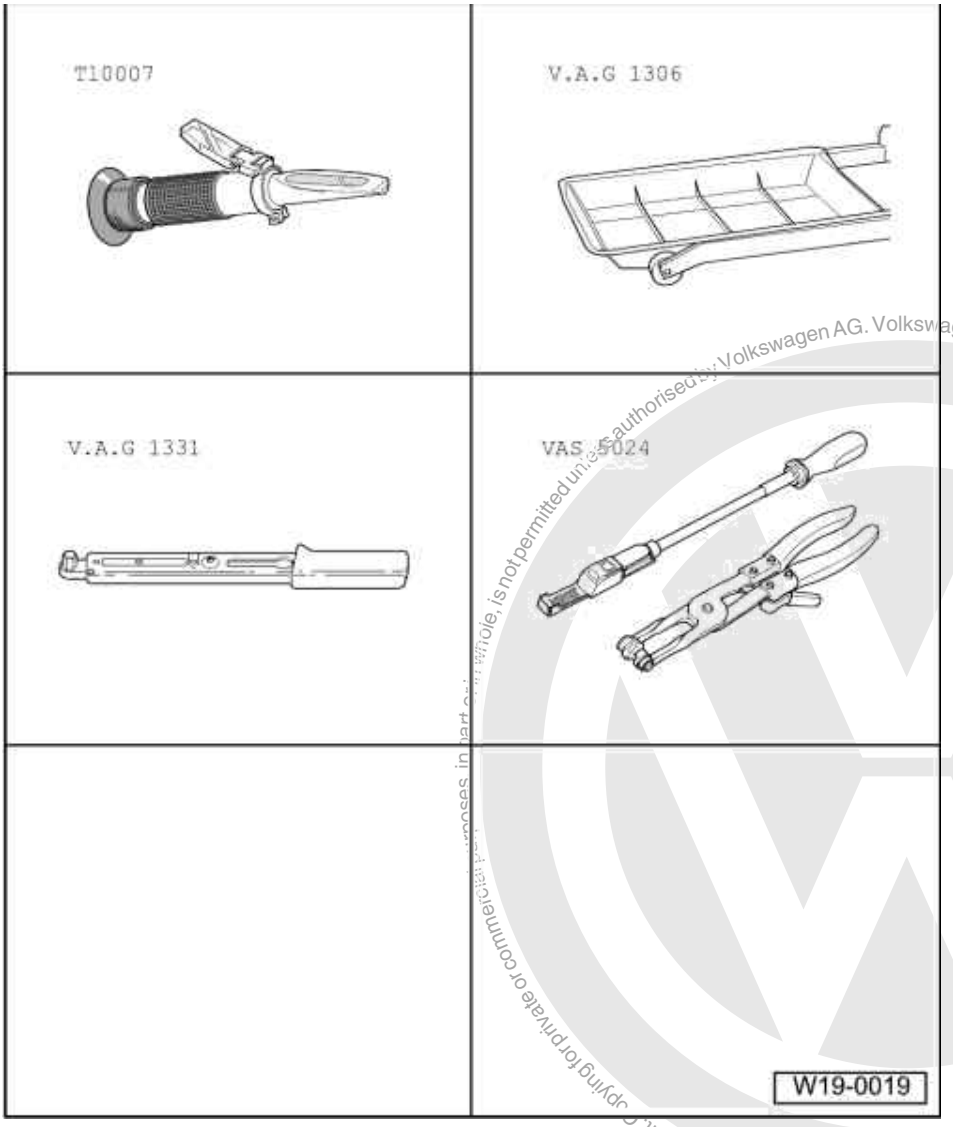

Protected copyright. Copying for private or commercial purposes, in part or in whole, is not permitted unless authorised by Volkswagen AG. Volkswagen AG does not guarantee or accept any liability with respect to the correctness of information in this document. Copyright by Volkswagen AG.
satelettronica

Special tools, workshop equipment, test and measuring appliances and auxiliary items required

- T10007 Refractometer
- V.A.G 1306 Drip tray
- V.A.G 1331 Torque wrench (5...50 Nm)
- VAS 5024 Assembly tool for spring-type clips

Removing

- Drain coolant => Page 115 .
- Pull coolant hoses off radiator.
- Pull connectors off thermo-switch and radiator fan.
- Remove radiator fan together with fan ring.

Vehicles with air conditioning system:

- Observe additional information and removal work => Page 119 .

- Remove radiator securing bolts and take out radiator from bottom.

Installing

Installation is carried out in the reverse order, when doing this note the following:

- Filling with coolant => Page 115
- Electrical connections and routing:

=> Current flow diagrams, Electrical fault finding and Fitting locations

Additional information and removal work on vehicles with air conditioner

Warning! The air conditioning system refrigerant circuit must not be opened.

Note:

To prevent damage to condenser and also to the refrigerant lines/hoses, ensure that the pipes and hoses are not stretched, kinked or bent.

- Remove retaining clamp(s) from refrigerant pipes.
- Removing lock carrier with attachments:

=> General body repairs; Repair group 50; Body, front; Removing and installing lock carrier with attachments. Body, front Removing and installing lock carrier with attachments.

- Remove radiator securing bolts.
- Remove condenser from cooler.
- Remove air conditioner compressor and position to one side with lock carrier so that the refrigerant hoses are not stressed.
- Check headlight adjustment and adjust if necessary:

=> Maintenance

Protected by copyright. Copyright for private or commercial purposes, in part or whole, is not permitted unless authorised by Volkswagen AG. Volkswagen AG does not guarantee or accept any liability with respect to the correctness of information in this document. Copyright by Volkswagen AG.

satelettronica

1.6 - Removing and installing coolant pump

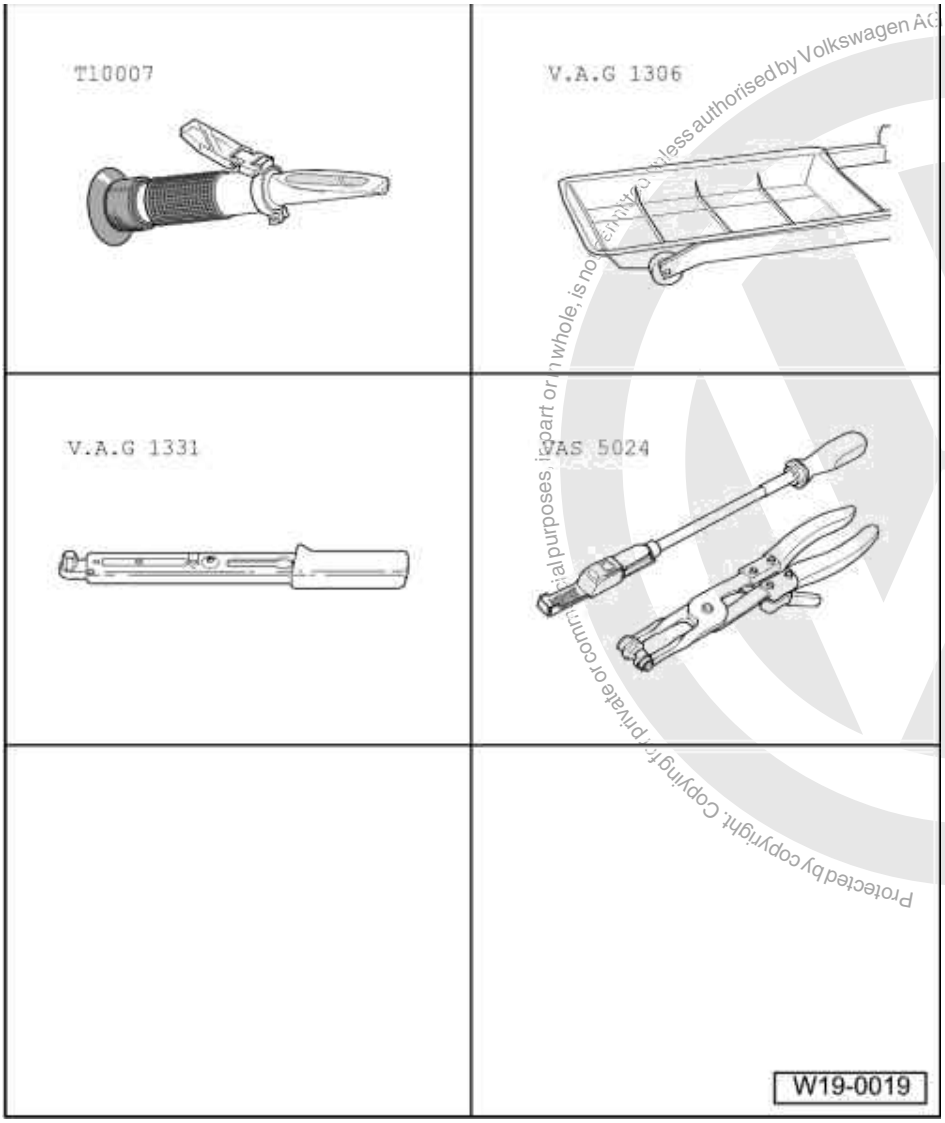

Protected by copyright. Copying for private or commercial purposes, in part or in whole, is not permitted unless authorised by Volkswagen AG. Volkswagen AG does not guarantee or accept any liability with respect to the correctness of information in this document. Copyright by Volkswagen AG.
satelettronica

Special tools, workshop equipment, test and measuring appliances and auxiliary items required

- T10007 Refractometer
- V.A.G 1306 Drip tray
- V.A.G 1331 Torque wrench (5...50 Nm)
- VAS 5024 Assembly tool for spring-type clips

Removing

Notes:

- Always renew seals and gaskets.
- The lower part of the toothed belt guard need not be removed.
- The toothed belt should be left in position on the crankshaft sprocket.
- Cover toothed belt with a cloth to protect it from coolant before removing coolant pump.

- Drain coolant => Page 115
- Remove ribbed belt => Page 25 .

Engine codes AGR, ALH, ASV

- Remove connecting pipe between charge air cooler and intake manifold/pressure hose.

Continued for all engine codes

- Remove windscreen washer reservoir.
- Remove upper and centre toothed belt guard => Page 20 .

- Take toothed belt off camshaft, injection pump and coolant pump sprockets => Page 60 ,Removing, installing and tensioning toothed belt.

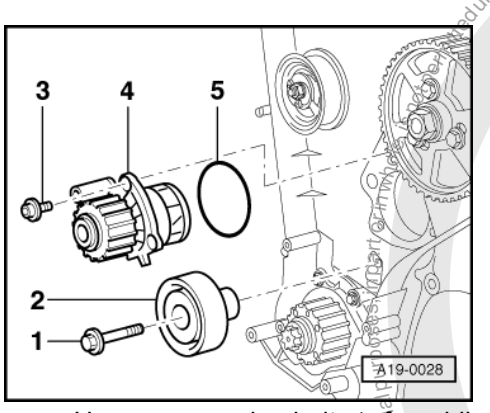

- -> Unscrew securing bolt -1- from idler wheel -2- and push idler wheel approx. 30 mm downwards.
- Unscrew coolant pump securing bolts -3- and carefully take out coolant pump -4-.

Installing

Installation is carried out in the reverse order, when doing this note the following:

- Moisten new O ring -5- with coolant.
- Insert coolant pump -4- into cylinder block and tighten securing bolts -3-.
  Tightening torque: 15 Nm

Note:

The coolant pump plug faces downwards.

- Install idler wheel -2- and tighten securing bolt -1- (replace).
  Tightening torque: 40 Nm + 90°(1/4 turn)
- Install and tension toothed belt => Page 60 .
- Install ribbed belt => Page 25 .

Engine codes AGR, ALH, ASV

- Install connecting pipe between charge air cooler and intake manifold/connecting hose.

Continued for all engine codes

- Fill with coolant => Page 115

Protected by copyright. Copyright by Volkswagen AG. Volkswagen AG does not guarantee or accept any liability with respect to the correctness of information in this document. Copyright by Volkswagen AG.
satelettronica

1.7 - Removing and installing thermostat

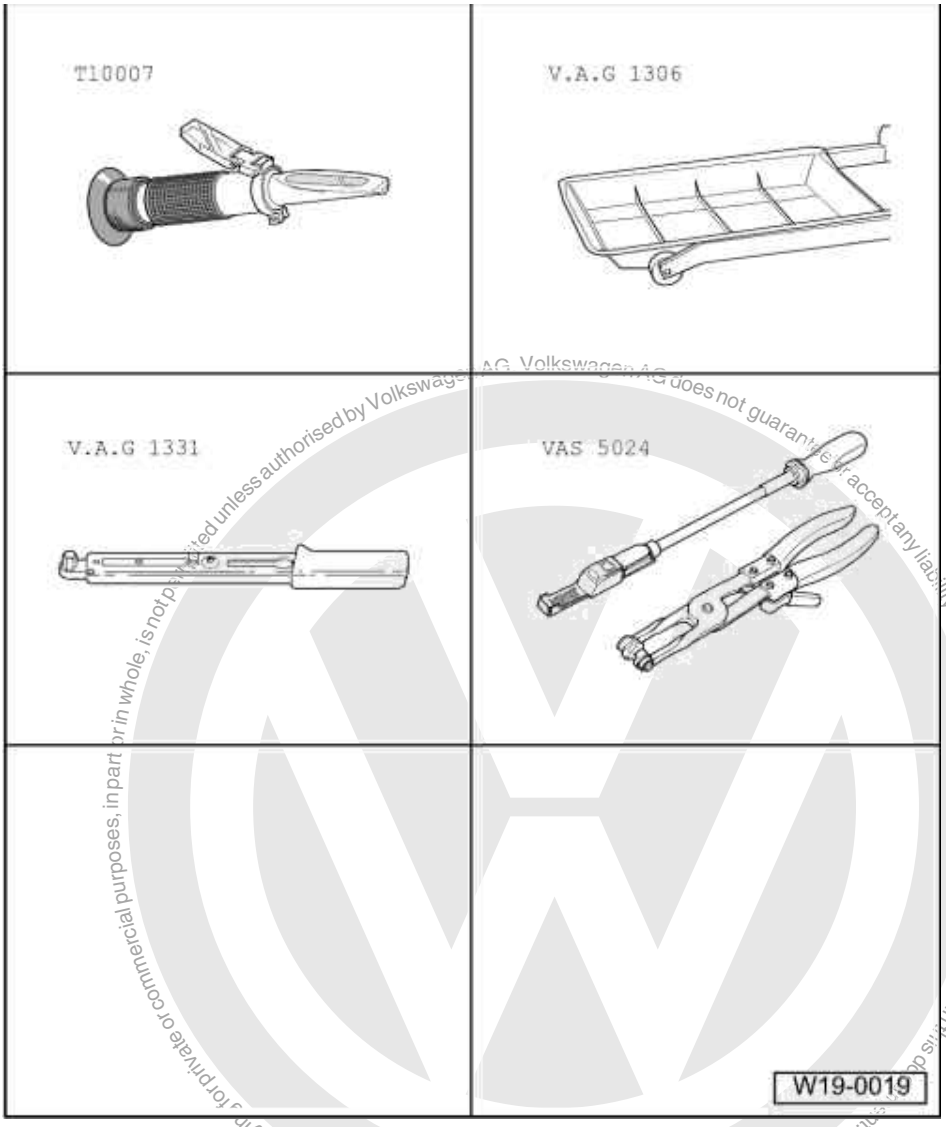

Protected by copyright. Copyright by Volkswagen AG.
Volkswagen AG does not guarantee or accept any liability with respect to the correctness of information in this document. Copyright by Volkswagen AG.
Protected by copyright. Copying for private or commercial purposes, in part or in whole, is not permitted unless authorised by Volkswagen AG.
satelettronica

Special tools, workshop equipment, test and measuring appliances and auxiliary items required

- T10007 Refractometer
- V.A.G 1306 Drip tray
- V.A.G 1331 Torque wrench (5...50 Nm)
- VAS 5024 Assembly tool for spring-type clips

Removing

Note:

- Always renew seals and gaskets.

- Drain coolant => Page 115

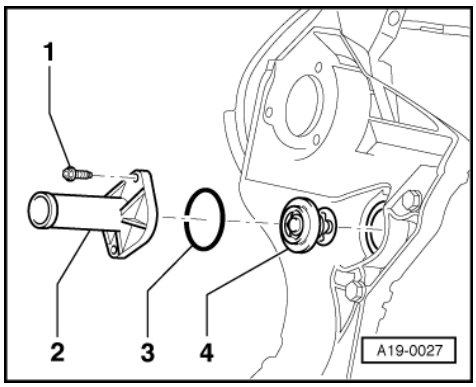

- -> Pull coolant hose off connecting flange -2-.
- Unbolt securing bolts -1- of connecting flange -2- and remove connecting flange -2- with thermostat -4-.
- Turn thermostat -4- 1/4 turn (90 °)to left and take out of connecting flange -2-.

Installing

Installation is carried out in the reverse order, when doing this note the following:

- Moisten new O ring -3- with coolant.
- Insert thermostat -4- into connecting flange -2- and turn 1/4 turn (90 °)to right.

Note:

The brace on the thermostat must be almost vertical.

- Fit connecting flange -2- with thermostat -4- into engine block.

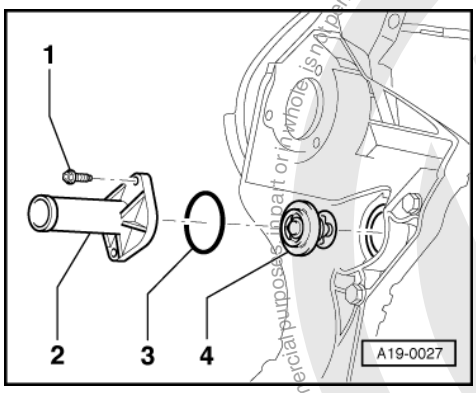

- -> Tighten securing bolts -1-.
  Tightening torque: 15 Nm
- Fill with coolant => Page 115

satelettronica
Protected by copyright. Copying for private or commercial purposes, in part or in whole, is not permitted unless authorised by Volkswagen AG. Volkswagen AG does not guarantee or accept any liability with respect to the correctness of information in this document. Copyright by Volkswagen AG.

20 - Fuel supply system

1 - Removing and installing parts of fuel supply system

1.1 - Removing and installing parts of fuel supply system

Notes:

- Hose connections are secured with either screw-type or spring-type clips.
- Always replace clamp-type clips with screw or spring-type clips.
- Assembly tool VAS 5024 or hose clip pliers V.A.G 1921 are recommended for fitting spring-type clips.

Removing and installing fuel tank with its attachments, Polo Classic, Polo Estate => Page 125 .

Removing and installing fuel tank with its attachments, Caddy => Page 130 .

Servicing fuel filter => Page 136 .

Observe safety precautions=> Page 138 .

Observe rules for cleanliness => Page 139 .

Servicing accelerator mechanism => Page 142

Protected by copyright. Copying for private or commercial purposes, in part or in whole, is not permitted unless authorised by Volkswagen AG. Volkswagen AG does not guarantee or accept any liability with respect to the correctness of information in this document. Copyright by Volkswagen AG.

satelettronica

1.2 - Removing and installing fuel tank with its attachments, Polo Classic, Polo Estate

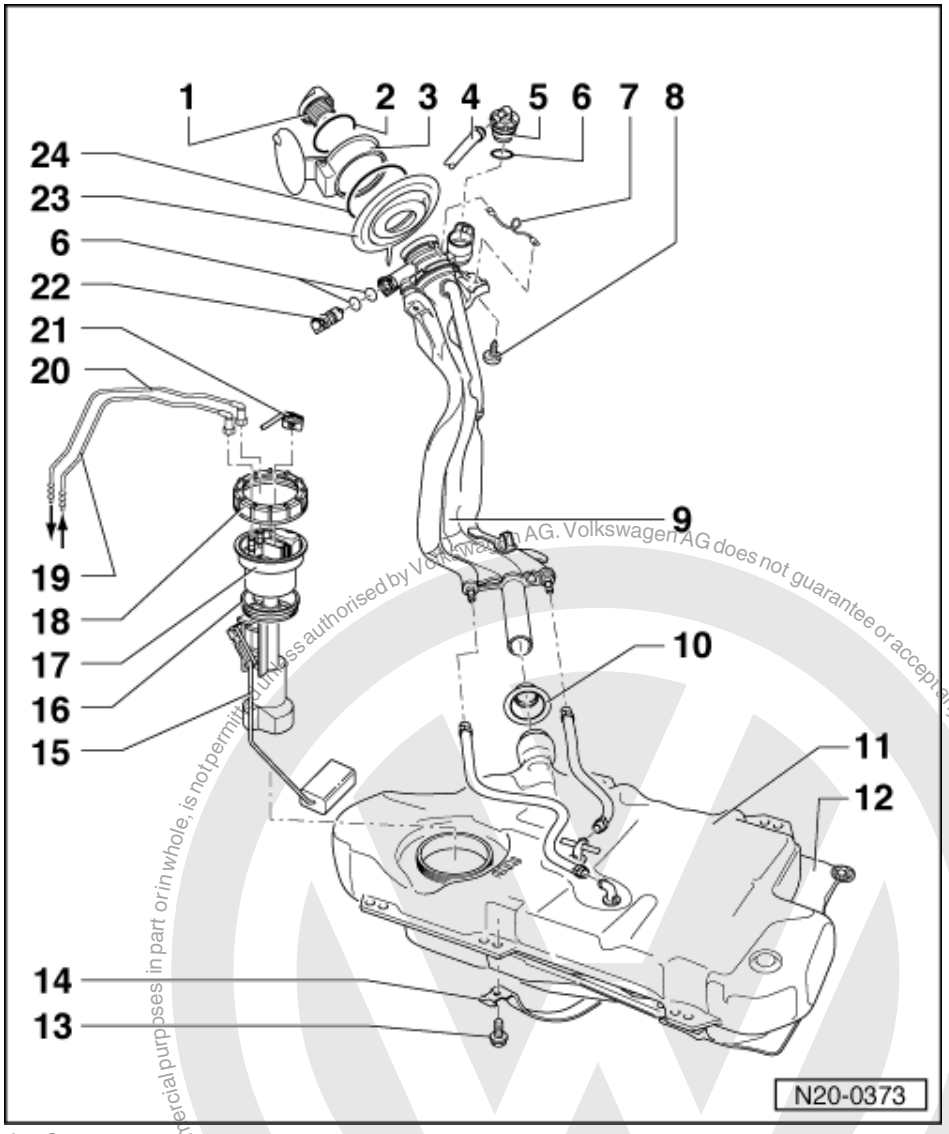

1 Cap
2 Seal
- Renew if damaged

3 Tank flap unit
- Removing and installing

=> General body repairs, Exterior; Repair group 55; Tank flap unit Tank flap unit

4 Vent pipe

5 Gravity/overflow valve
- To remove, release locking lug and unclip valve upwards out of filler neck
- Check valve for through-flow
  valve vertical: open,
  valve tilted 45 °: closed

Protected by copyright. Copying for private or commercial purposes, in part or in whole, is not permitted unless authorised by Volkswagen AG. Volkswagen AG does not guarantee or accept any liability with respect to the correctness of information in this document. Copyright by Volkswagen AG.
satelettronica

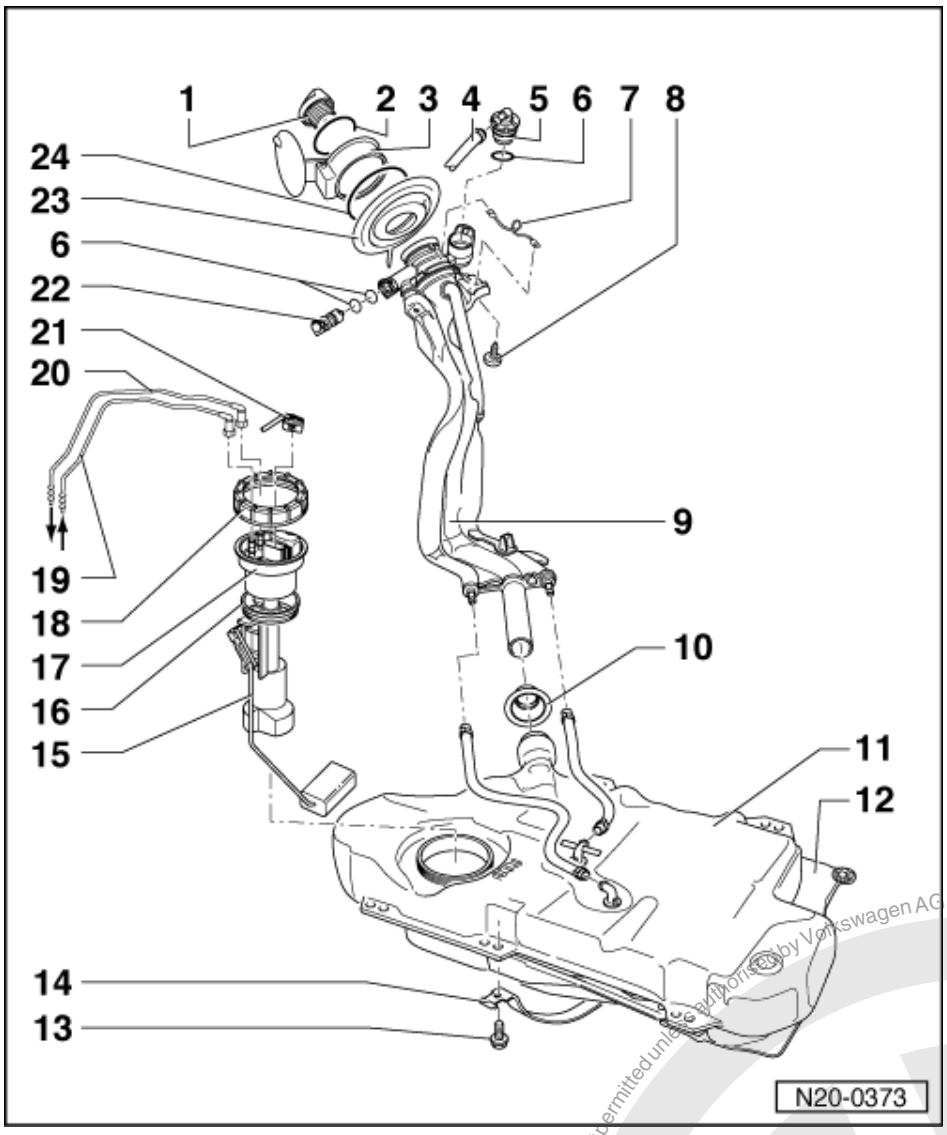

6 O-ring
- Renew if damaged

7 Earth connection
- Check securely seated

8 4 Nm

9 Filler pipes
- With non-return valve

10 Sealing boot
- After installing filler pipes fit over fuel tank connections, having turned boot inside out

11 Fuel tank
- Support with engine/gearbox jack V.A.G 1383 A when removing
- Removing and installing
  => Page 139

Protected by copyright. Copying for private or commercial purposes, in part or in whole, is not permitted unless authorised by Volkswagen AG. Volkswagen AG does not guarantee or accept any liability with respect to the correctness of information in this document. Copyright by Volkswagen AG.
satelettronica

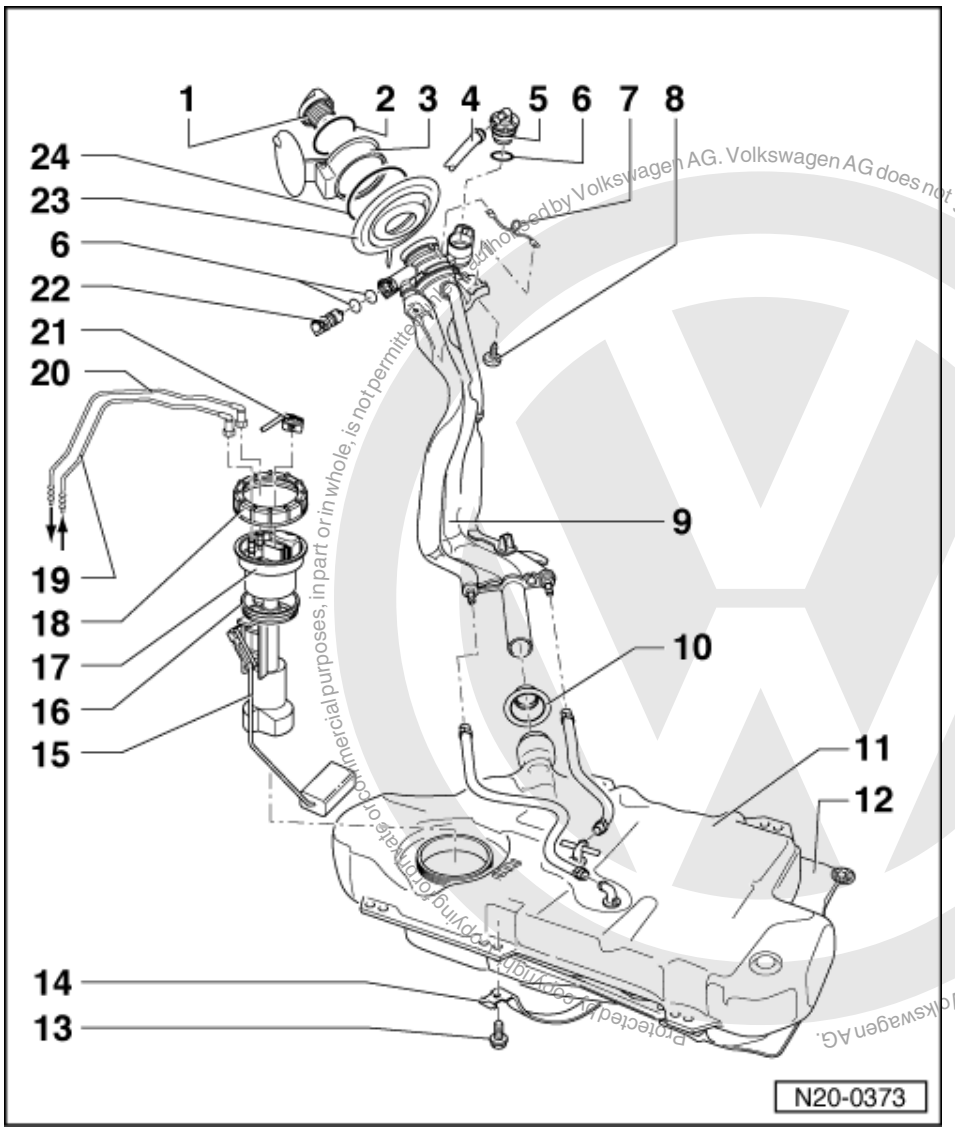

12 Heat shield

- Press clamping washer from heat shield tightly onto pins on vehicle floor

13 25 Nm

14 Securing strap

15 Fuel gauge sender

- Note fitting position on fuel tank => Fig. 1
- Sender with strainer telescopic to upper part

16 Sealing ring

- Renew if damaged
- Coat with fuel when installing

17 Flange

- Note fitting position on fuel tank => Fig. 1

Protected by copyright. Copying for private or commercial purposes, in part or in whole, is not permitted unless authorised by Volkswagen AG. Volkswagen AG does not guarantee or accept any liability with respect to the correctness of information in this document. Copyright by Volkswagen AG.
satelettronica

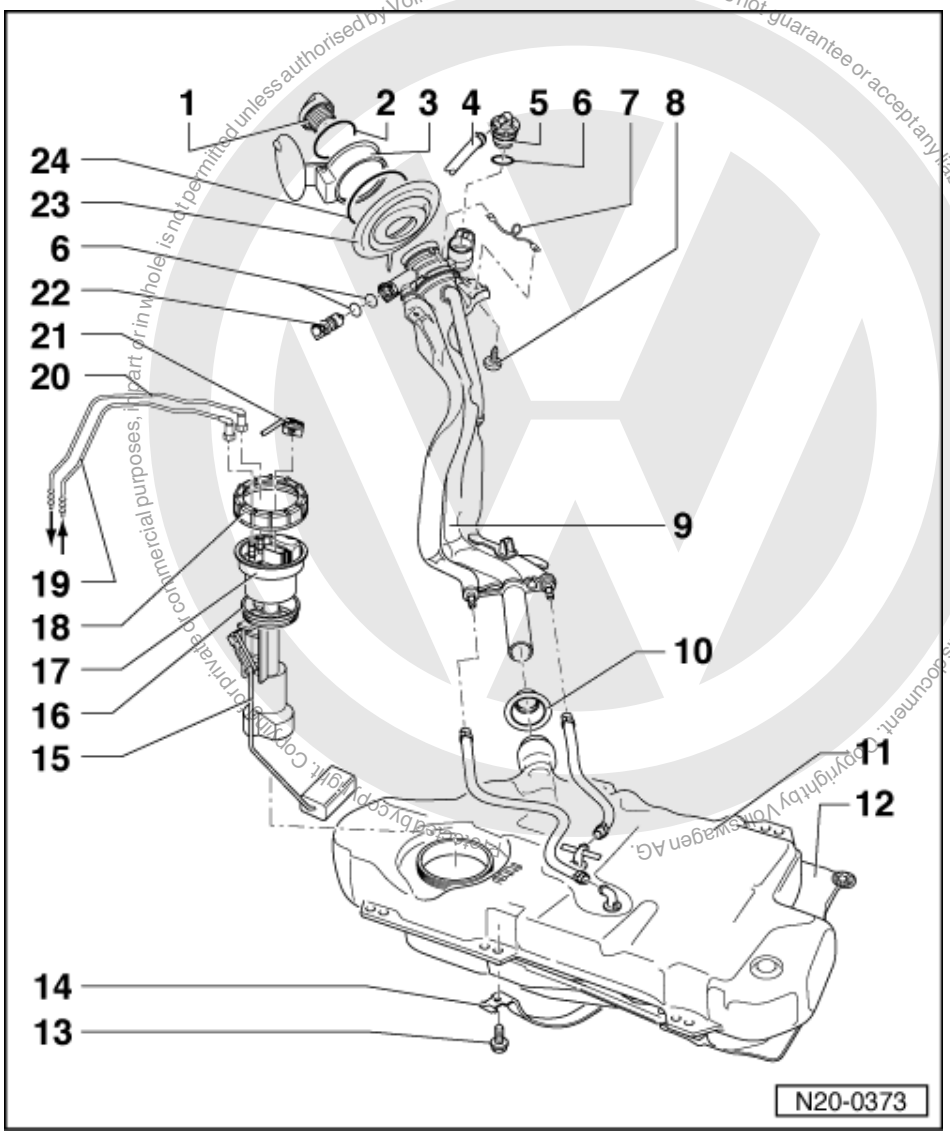

18 Union nut

- Remove and install with ring nut spanner 3217

19 Return line

- Blue
- Check securely seated
- Clipped onto fuel tank
- To remove from flange press release button on connecting piece

20 Supply line

- Black
- Check securely seated
- Clipped onto fuel tank
- To remove from flange press release button on connecting piece

21 Connector

- Black, 2-pin

satelettronica

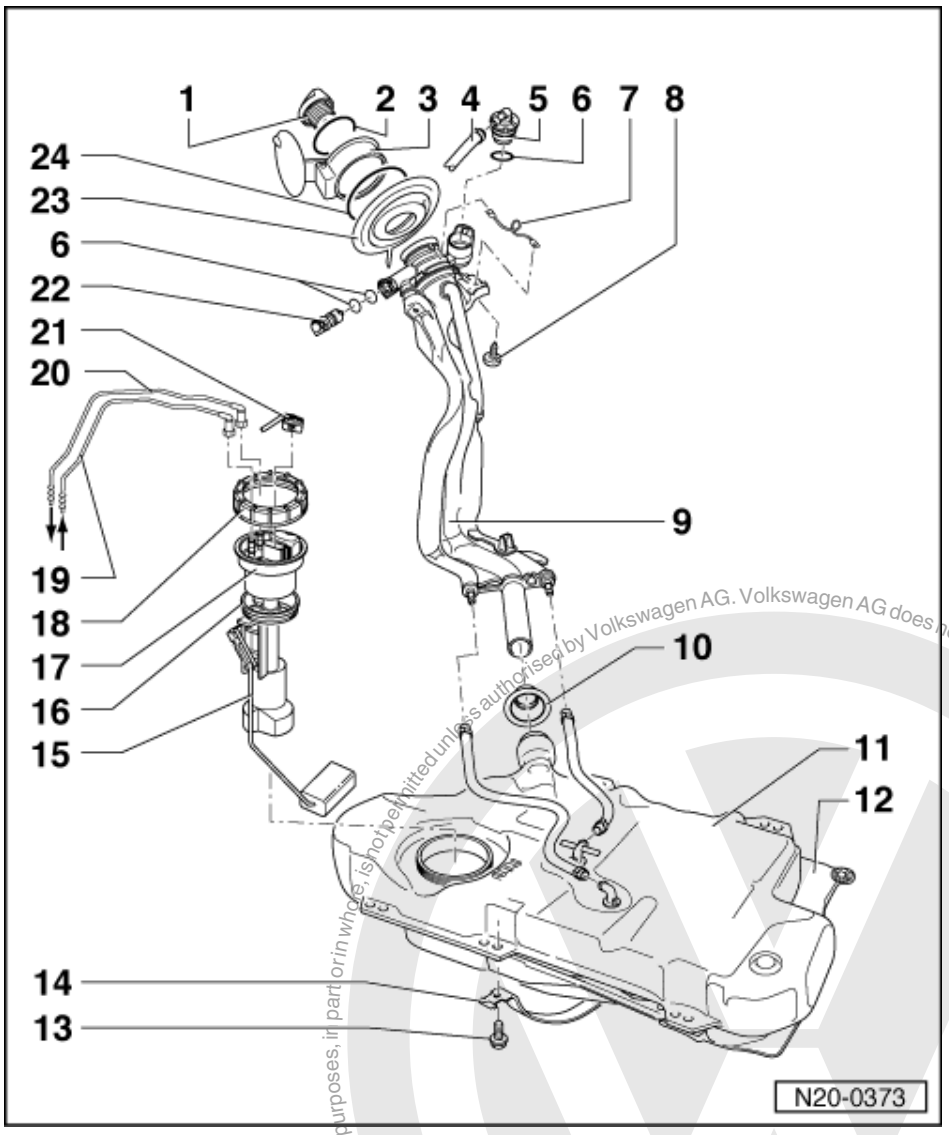

22 Vent valve

- Checking =>Fig. 2
- To remove pull locking latch lightly to inside -arrow- and pull valve out

23 Cup

- For filler pipes

24 Retaining ring

Protected by copyright. Copying for private or commercial purposes, in part or in whole, is not permitted unless authorised by Volkswagen AG. Volkswagen AG does not guarantee or accept any liability with respect to the correctness of information in this document. Copyright by Volkswagen AG.
satelettronica

1.3 - Removing and installing fuel tank with its attachments, Caddy

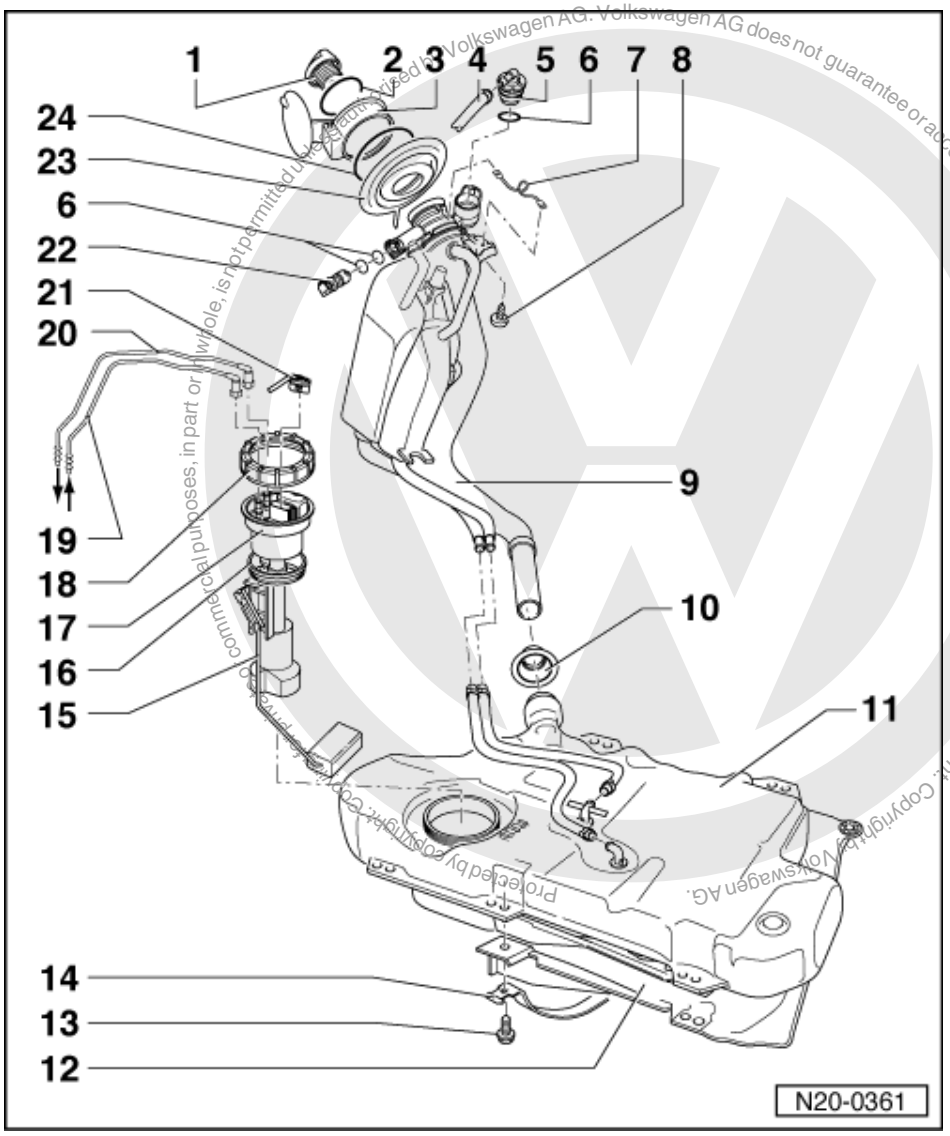

1 Cap
2 Seal
- Renew if damaged

3 Tank flap unit
- Removing and installing

=> General body repairs, Exterior; Repair group 55; Tank flap unit Tank flap unit

4 Vent pipe
5 Gravity/overflow valve
- To remove, release locking lug and unclip valve upwards out of filler neck
- Check valve for through-flow
  valve vertical: open,
  valve tilted 45 °: closed

satelettronica

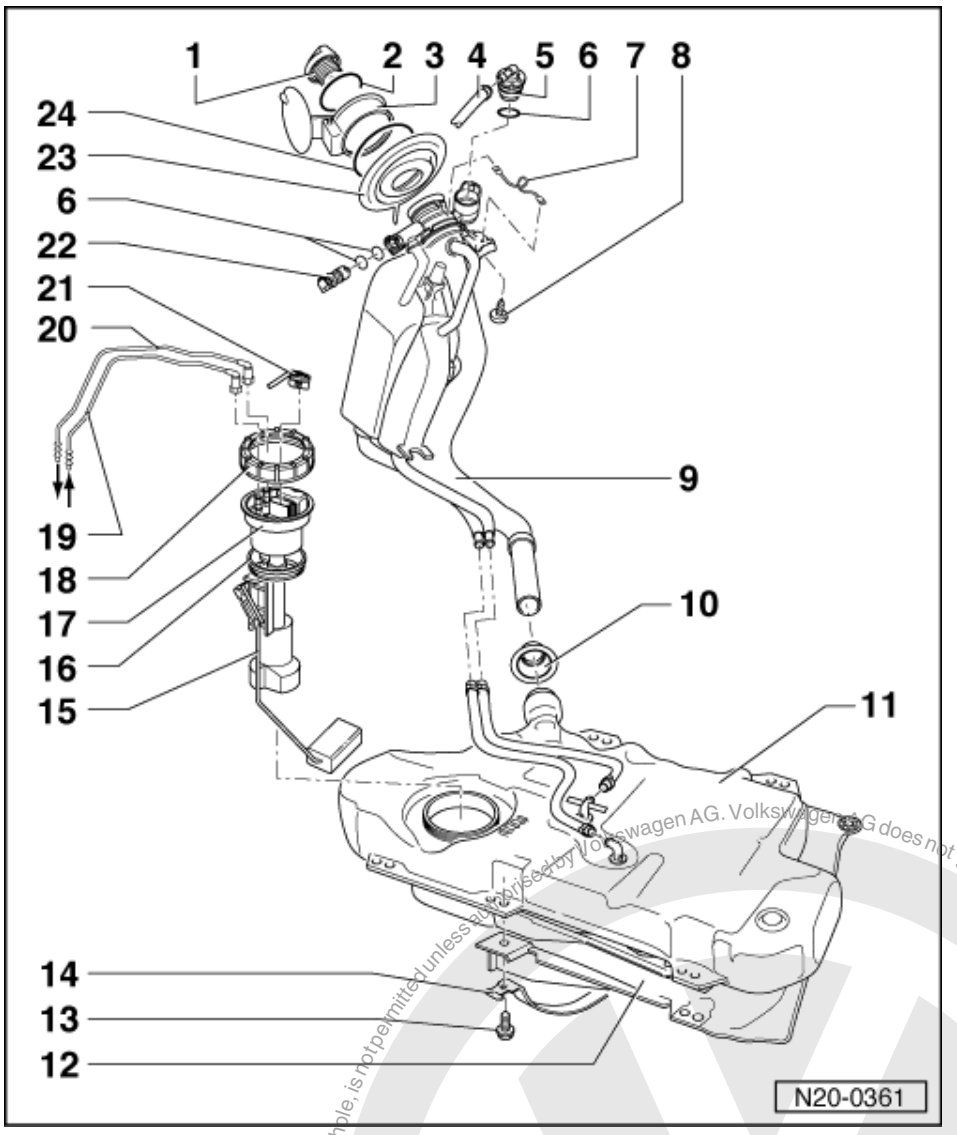

6 O-ring
- Renew if damaged

7 Earth connection
- Check securely seated

8 4 Nm

9 Filler pipes
- With non-return valve

10 Sealing boot
- After installing filler pipes fit over fuel tank connections, having turned boot inside out

11 Fuel tank
- Support with engine/gearbox jack V.A.G 1383 A when removing
- Removing and installing
  => Page 139

Protected by copyright. Copying for private or commercial purposes, in part or in whole, is not permitted unless authorised by Volkswagen AG. Volkswagen AG does not guarantee or accept any liability with respect to the correctness of information in this document. Copyright by Volkswagen AG.
satelettronica

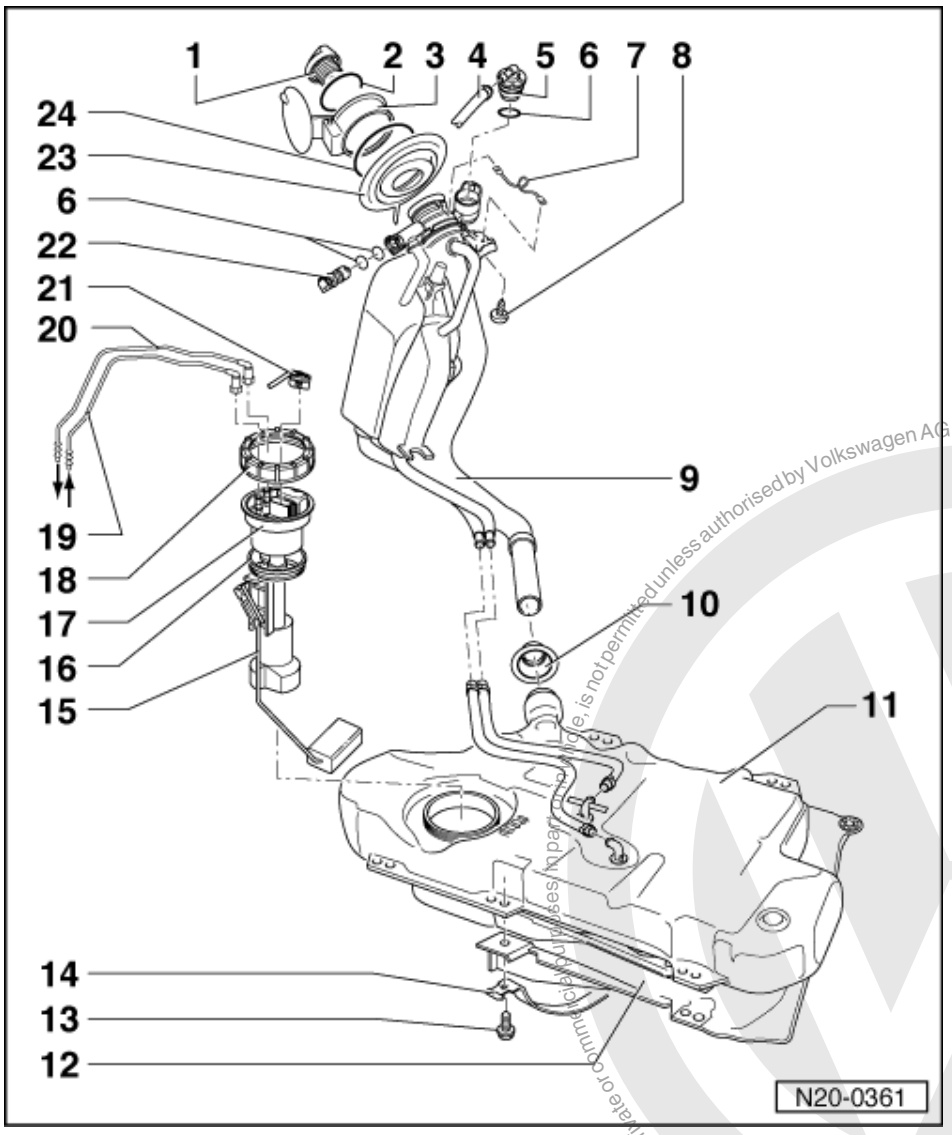

12 Heat shield

- Press clamping washer from heat shield tightly onto pins on vehicle floor

13 25 Nm

14 Securing strap

15 Fuel gauge sender

- Note fitting position on fuel tank => Fig. 1
- Sender with strainer telescopic to upper part

16 Sealing ring

- Renew if damaged
- Coat with fuel when installing

17 Flange

- Note fitting position on fuel tank => Fig. 1

Protected by copyright. Copying for private or commercial purposes, in part or in whole, is not permitted unless authorised by Volkswagen AG. Volkswagen AG does not guarantee or accept any liability with respect to the correctness of information in this document. Copyright by Volkswagen AG.
satelettronica

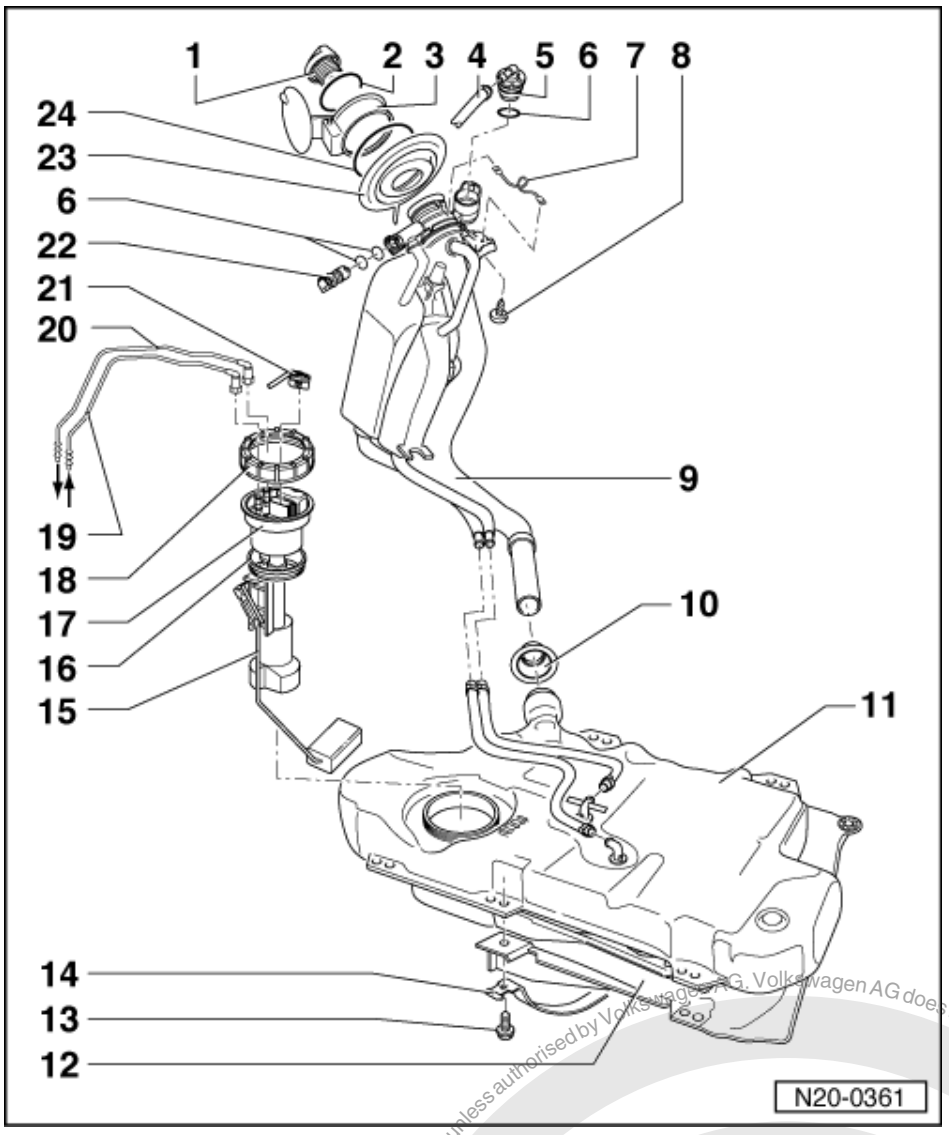

18 Union nut
- Remove and install with ring nut spanner 3217

19 Return line
- Blue
- Check securely seated
- Clipped onto fuel tank
- To remove from flange press release button on connecting piece

20 Supply line
- Black
- Check securely seated
- Clipped onto fuel tank
- To remove from flange press release button on connecting piece

21 Connector
- Black, 2-pin

Protected by copyright. Copying for private or commercial purposes, in part or in whole, is not permitted unless authorised by Volkswagen AG. Volkswagen AG does not guarantee or accept any liability with respect to the correctness of information in this document. Copyright by Volkswagen AG.
satelettronica

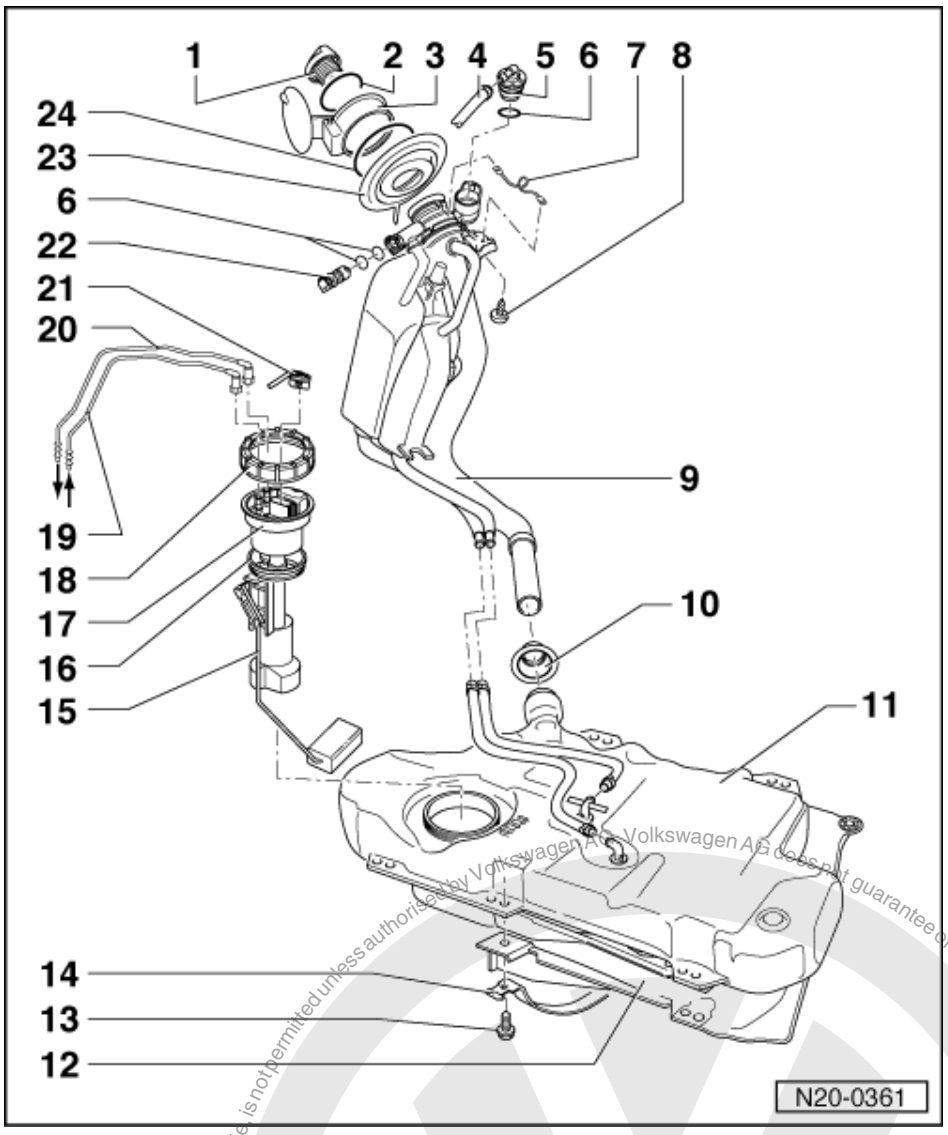

22 Vent valve

- Checking =>Fig. 2
- To remove pull locking latch lightly to inside -arrow- and pull valve out

23 Cup

- For filler pipes

24 Retaining ring

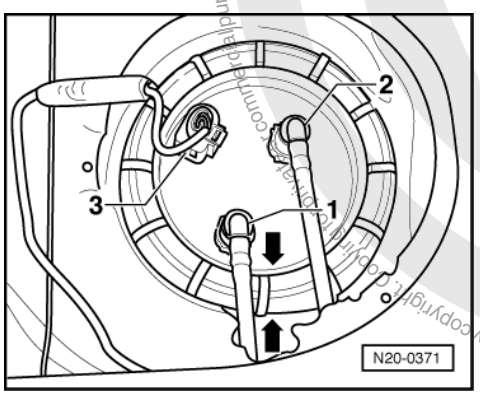

Protected by copyright. Copyright by Volkswagen AG. Volkswagen AG does not guarantee or accept any liability with respect to the correctness of information in this document. Copying for private or commercial purposes, in part or in whole, is not permitted unless authorised by Volkswagen AG.
satelettronica

-> Fig. 1 Installation position of fuel gauge sender

Marking on the flange must align with marking on the fuel tank.

Note:

After installing the fuel gauge sender, check that the fuel supply pipe -2- and fuel return pipe -1- are still clipped on the fuel tank.

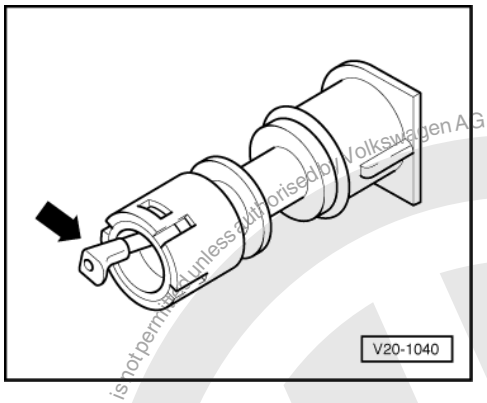

-> Fig. 2 Checking vent valve

Lever in rest position: Closed

Lever pushed in direction of arrow: Open

Protected by copyright. Copying for private or commercial purposes, in part or in whole, is not permitted unless authorised by Volkswagen AG. Volkswagen AG does not guarantee or accept any liability with respect to the correctness of information in this document. Copyright by Volkswagen AG.
satelettronica

1.4 - Servicing fuel filter

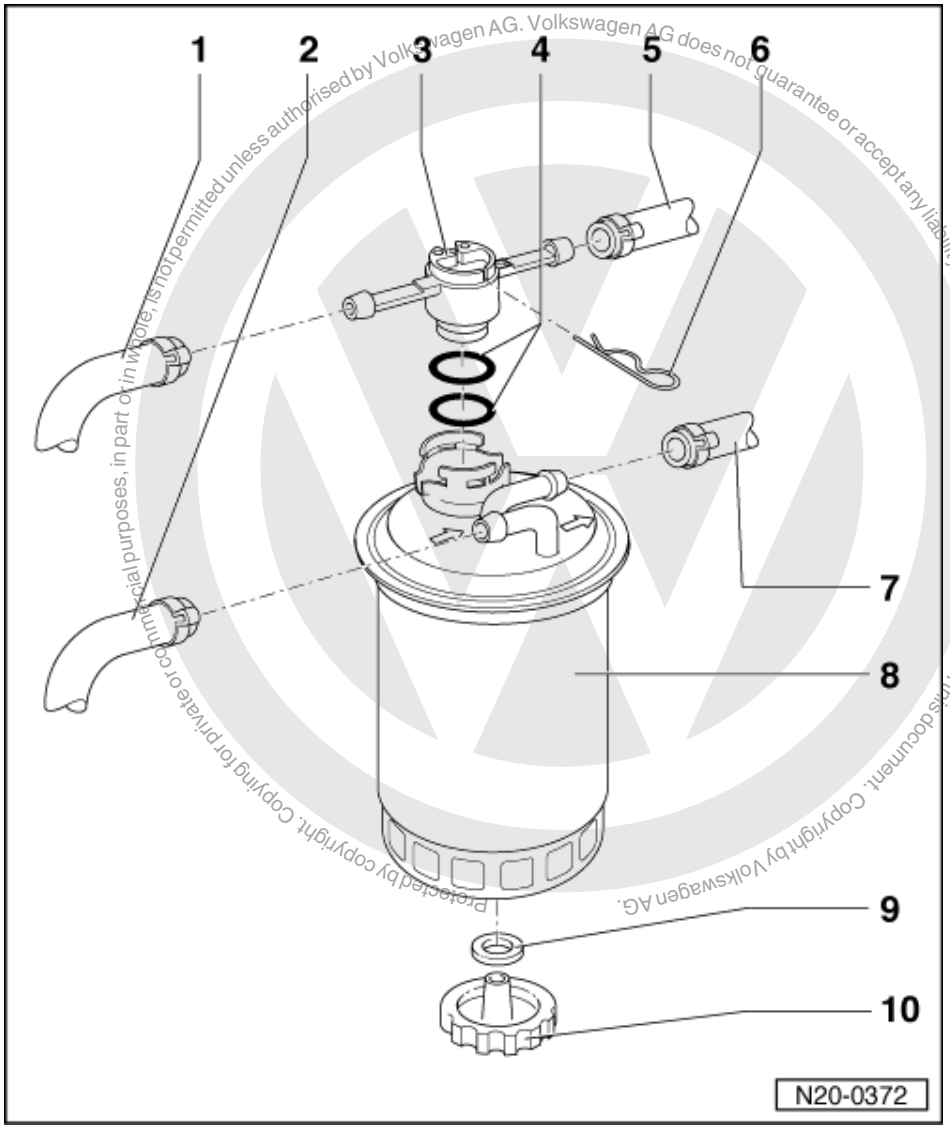

Protected by copyright. Copyright by Volkswagen AG. Volkswagen AG does not guarantee or accept any liability with respect to the correctness of information in this document. Copyright by Volkswagen AG. Copying for private or commercial purposes, in part or in whole, is not permitted unless authorised by Volkswagen AG.

1 Return pipe
- To fuel tank
- Blue or with blue marking
- Check securely seated

2 Supply line
- From fuel tank
- White or with white marking
- Check securely seated

satelettronica

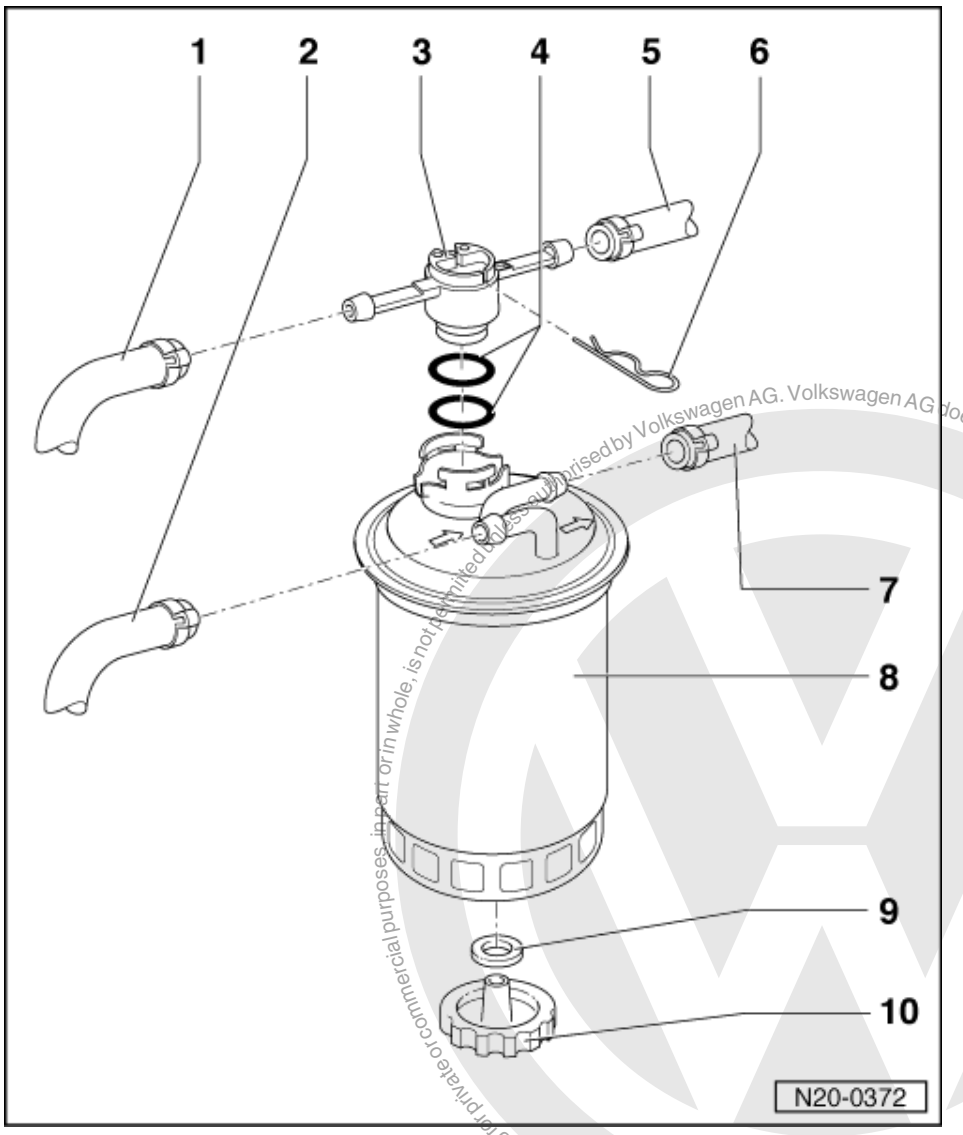

3 Control valve
- Installation position: arrow points towards fuel tank
- When changing filter, remove securing clip and take control valve off complete with fuel pipes
- Below + 15 °C:
  Passageway to filter open
- Over + 31 °C:
  Passageway to filter closed
- Check securely seated

4 O-ring
- Renew

5 Return pipe
- From injection pump
- Blue or with blue marking
- Check securely seated

6 Securing clip

Protected by copyright. Copying for private or commercial purposes, in part or in whole, is not permitted unless authorised by Volkswagen AG. Volkswagen AG does not guarantee or accept any liability with respect to the correctness of information in this document. Copyright by Volkswagen AG.
satelettronica

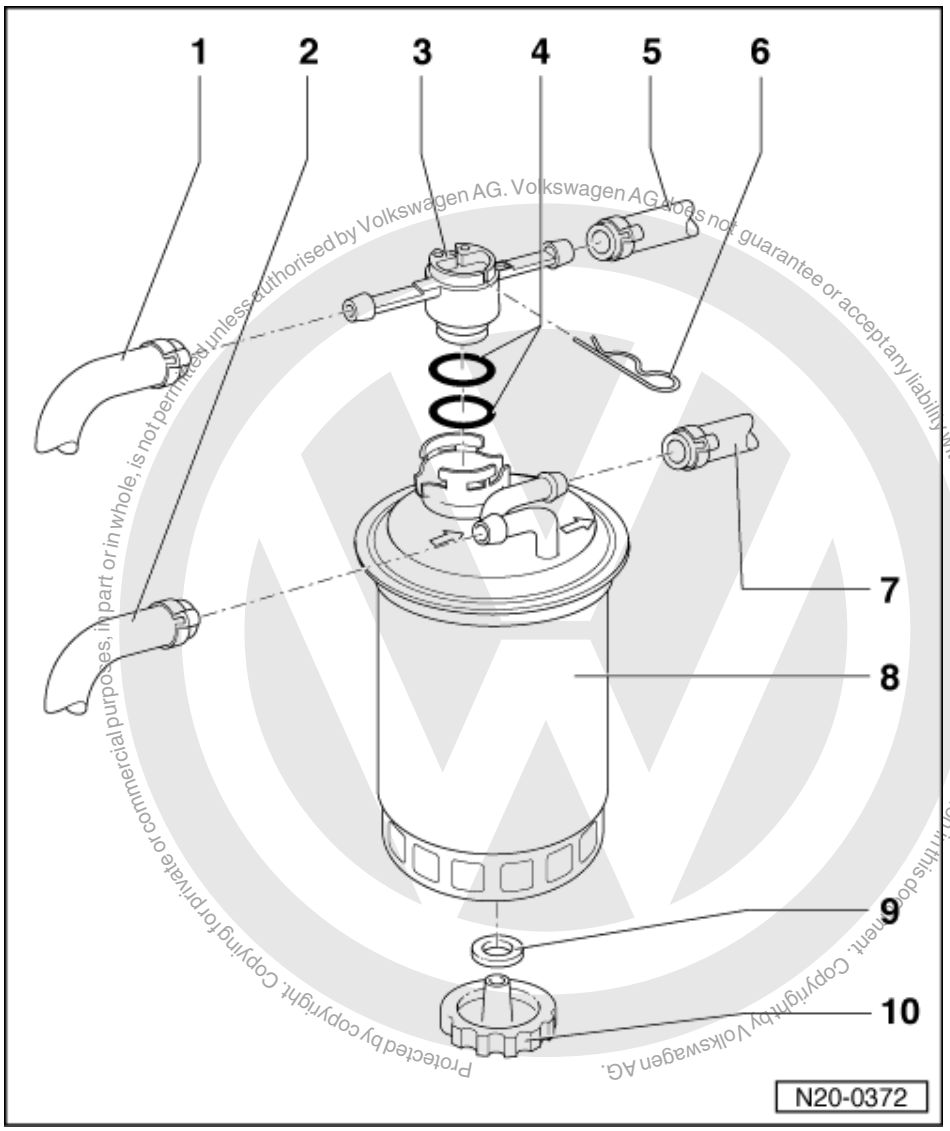

Protected by copyright. Copyright by Volkswagen AG.
Volkswagen AG does not guarantee or accept any liability with respect to the correctness of information in this document. Copyright by Volkswagen AG. Copying for private or commercial purposes, in part or in whole, is not permitted unless authorised by Volkswagen AG.

7 Supply pipe
- To injection pump
- White or with white marking
- Check securely seated

8 Fuel filter
- Fill with diesel before installing
- Flow direction is marked by an arrow
- Do not interchange connections
- Renew if damaged

9 Seal
- Renew if damaged

10 Water drain plug
- To bleed remove securing clip and take control valve off complete with fuel pipes attached
- Loosen and allow approx. 100 cm3 fluid to drain

1.5 - Safety precautions when working on the fuel supply system

When removing and installing the fuel gauge sender from a full or partly full fuel tank the following must be observed:

satelettronica

- Before commencing work, switch on exhaust extraction system and place an extraction hose close to the sender opening in the fuel tank to extract escaping fuel fumes.
  If no exhaust extraction system is available, a radial fan (as long as motor is not in air flow) with a displacement greater than 15 m3/h can be used.
- Prevent skin contact with fuel! Wear fuel-resistant gloves!

1.6 - Rules for cleanliness

When working on the fuel supply/injection system, pay careful attention to the following "6 rules":

- Thoroughly clean all unions and the adjacent areas before disconnecting.
- Place parts that have been removed on a clean surface and cover. Do not use fluffy cloths!
- Carefully cover opened components or seal, if the repair cannot be carried out immediately.
- Only install clean components:
  Only unpack replacement parts immediately prior to installation.
  Do not use parts that have been stored loose (e.g. in tool boxes etc.).
- When the system is open:
  Do not work with compressed air if this can be avoided.
  Do not move vehicle unless absolutely necessary.
- Also ensure that no diesel fuel runs onto the coolant hoses. Hoses coming in contact with fuel must be cleaned immediately. Damaged hoses must be replaced.

1.7 - Removing and installing fuel tank

Special tools, workshop equipment, testers, measuring instruments and auxiliary items required

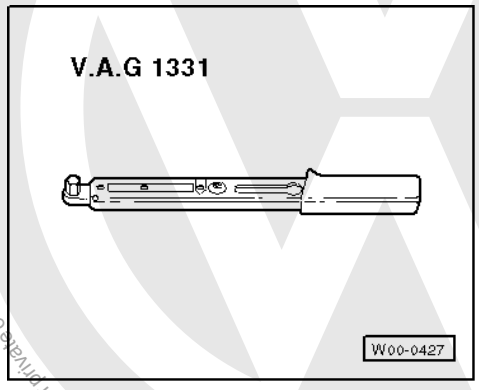

- -> V.A.G 1331 Torque wrench (5...50 Nm)

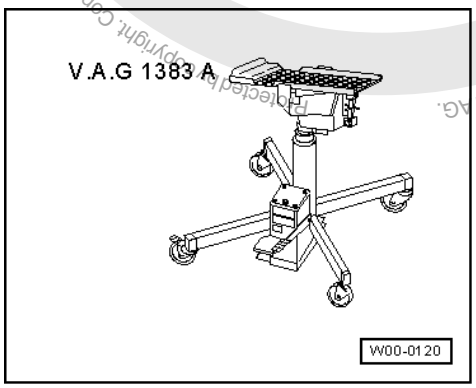

- -> V.A.G 1383 A Engine/gearbox jack

satelettronica

Protected by copyright. Copying for private or commercial purposes, in part or in whole, is not permitted unless authorised by Volkswagen AG. Volkswagen AG does not guarantee or accept any liability with respect to the correctness of information in this document. Copyright by Volkswagen AG.

satelettronica

Removing

- Note safety precautions before starting work
  => Page 138

Note:

Check whether a coded radio is installed as during the forthcoming work sequences the battery earth strap must be disconnected. Obtain radio code first if necessary.

- With the ignition switched off disconnect battery earth strap.

Caddy Van:

- Lift front, right load area floor covering.
- Now remove the right-hand load area floor piece.

=> General body repairs; Repair group 70; Removing and installing load compartment floor panel (Caddy)
Removing and installing load compartment floor panel (Caddy)

- Remove floor cover.

Caddy Kombi, Polo Classic, Polo Estate:

- Fold rear seat bench forwards.
- Remove floor cover.

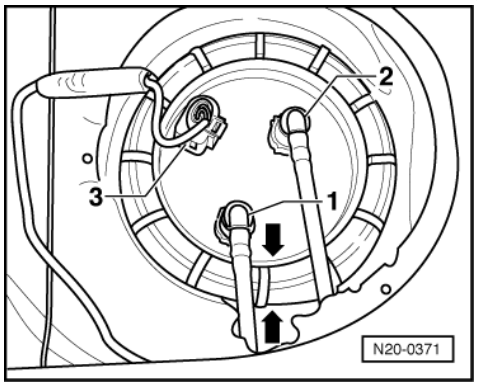

When the floor cover is removed:

- -> Pull-off fuel return pipe/hose -1- (blue) and fuel supply pipe/hose -2- (black) on flange.

Note:

Press buttons on hose couplings -arrows- to do this.

- Pull-off connector -3- from flange.
- Drain fuel tank.

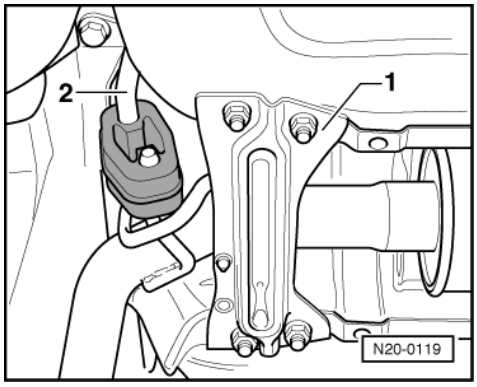

- -> Remove rear connecting support -1-.
- Remove all rear exhaust system mountings -2- from body and secure the slightly lowered exhaust system with wire to body.
- Remove rear right wheel.
- Unbolt filler neck from body.
- Take filler cap off filler neck and unclip neck from cup.

Polo Classic, Polo Estate:

- Pull off breather hoses at filler neck.
- Remove clamping disc for fuel tank heat shield.
- Unbolt fuel tank from body and lower tank slightly using gearbox jack.
- Remove filler neck.
- Take out fuel tank together with heat shield.

Caddy:

- Remove shock absorber upper securing nut and push securing bolt out inwards approx. 2 cm (Do not remove shock absorber).
- Remove heat shield on fuel tank.
- Take out fuel tank, when doing this guide fuel filler neck out between shock absorber and spring (turn fuel tank through 90°).

Installing

Install in reverse order but note following:

- Breather and fuel hoses are to be installed kink-free.
- Do not interchange supply and return hose (return hose blue or blue markings, supply hose black).
- Ensure fuel hoses are seated securely.
- Clip supply and return pipe onto fuel tank.

Protected by copyright. Copyright for private or commercial purposes, in part or in whole, is not permitted unless authorised by Volkswagen AG. Volkswagen AG does not guarantee or accept any liability with respect to the correctness of information in this document. Copyright by Volkswagen AG.
satelettronica

1.8 - Servicing accelerator mechanism

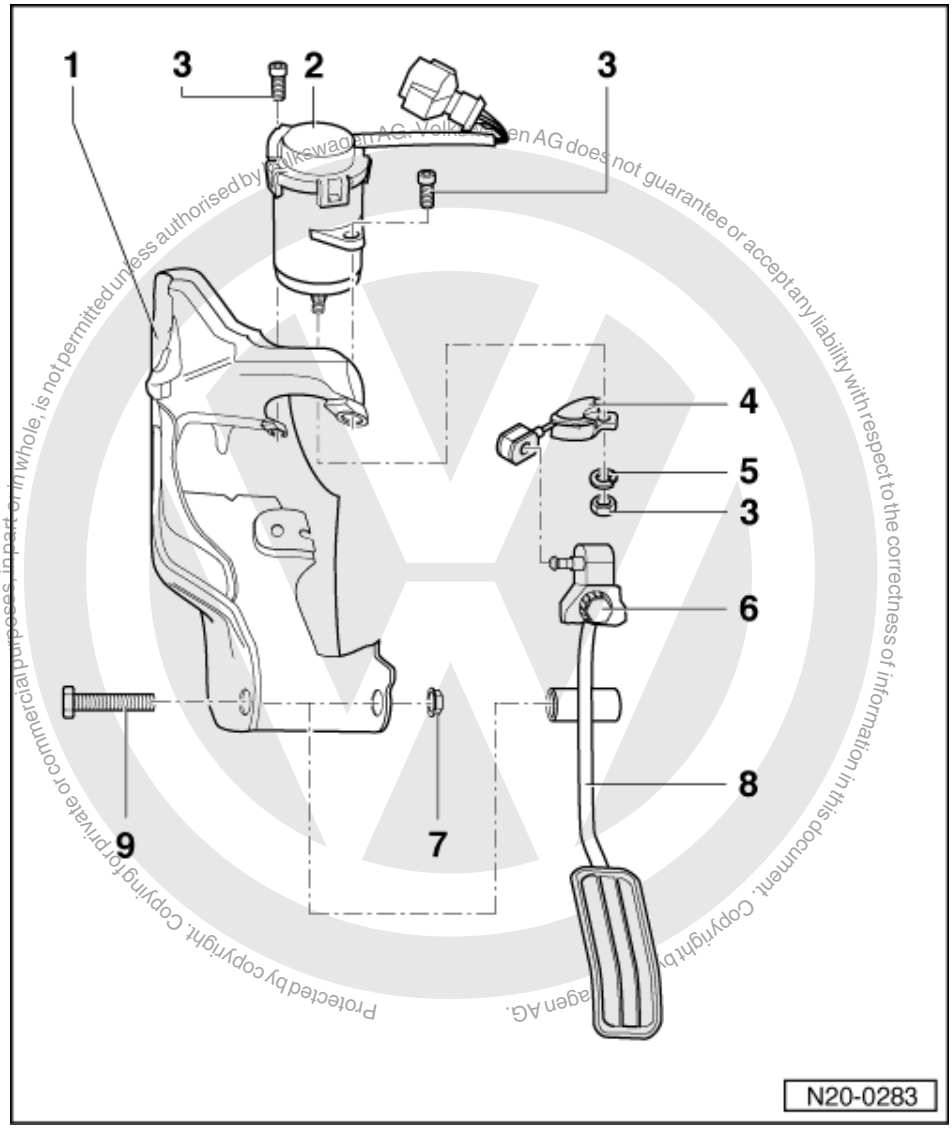

Protected by copyright. Copying for private or commercial purposes, in part or in whole, is not permitted unless authorised by Volkswagen AG. Volkswagen AG does not guarantee or accept any liability with respect to the correctness of information in this document. Copyright by Volkswagen AG.

1 Bracket
2 Accelerator pedal position sender (G79)
- The accelerator pedal position passes the position of the pedal on to the engine control unit
- Remove footwell cover to remove sender
- Checking =>Page 144
- Adjusting =>Page 147

3 10 Nm
4 Cable cam
- Installing => Fig. 1

5 Spring washer
6 Adjustment bolt
- Adjusting =>Page 147

satelettronica

Protected by copyright. Copying for private or commercial purposes, in part or in whole, is not permitted unless authorised by Volkswagen AG. Volkswagen AG does not guarantee or accept any liability with respect to the correctness of information in this document. Copyright by Volkswagen AG.

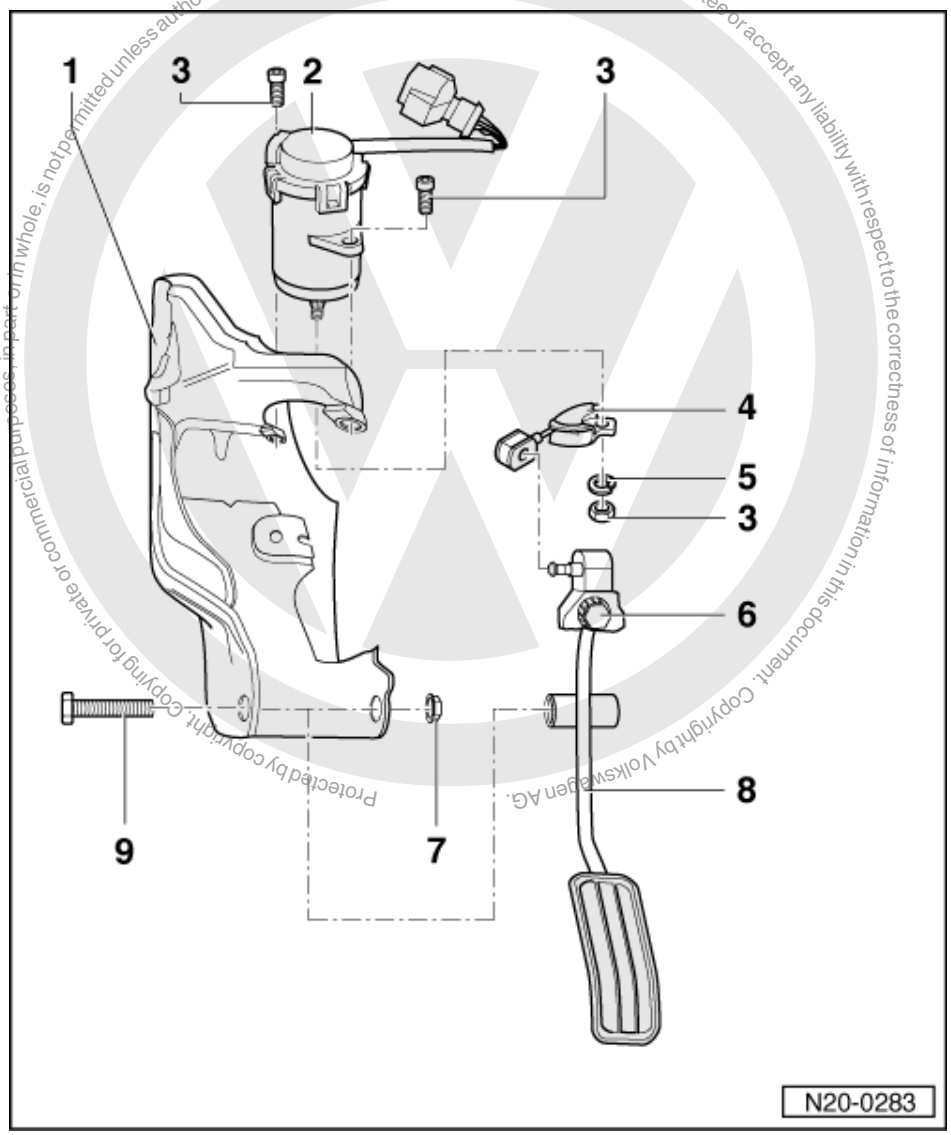

7 20 Nm
8 Accelerator pedal
9 Hexagon bolt M8

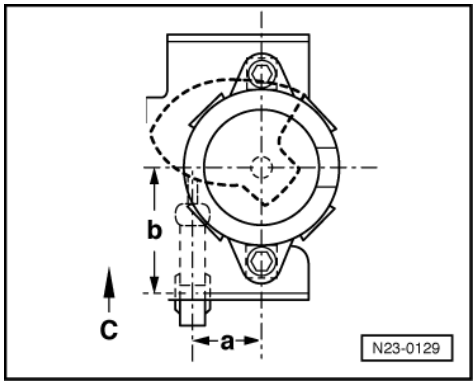

-> Fig.1 Installing cable cam

- Secure cable cam to sender so that the dimensions shown are adhered to when facing forwards.
  a = 22 ±0.05 mm
  b = 41±0.05 mm

satelettronica

c = Forwards

Note:

The cable cam eye must be parallel to the forward direction.

1.9 - Checking accelerator pedal position sender

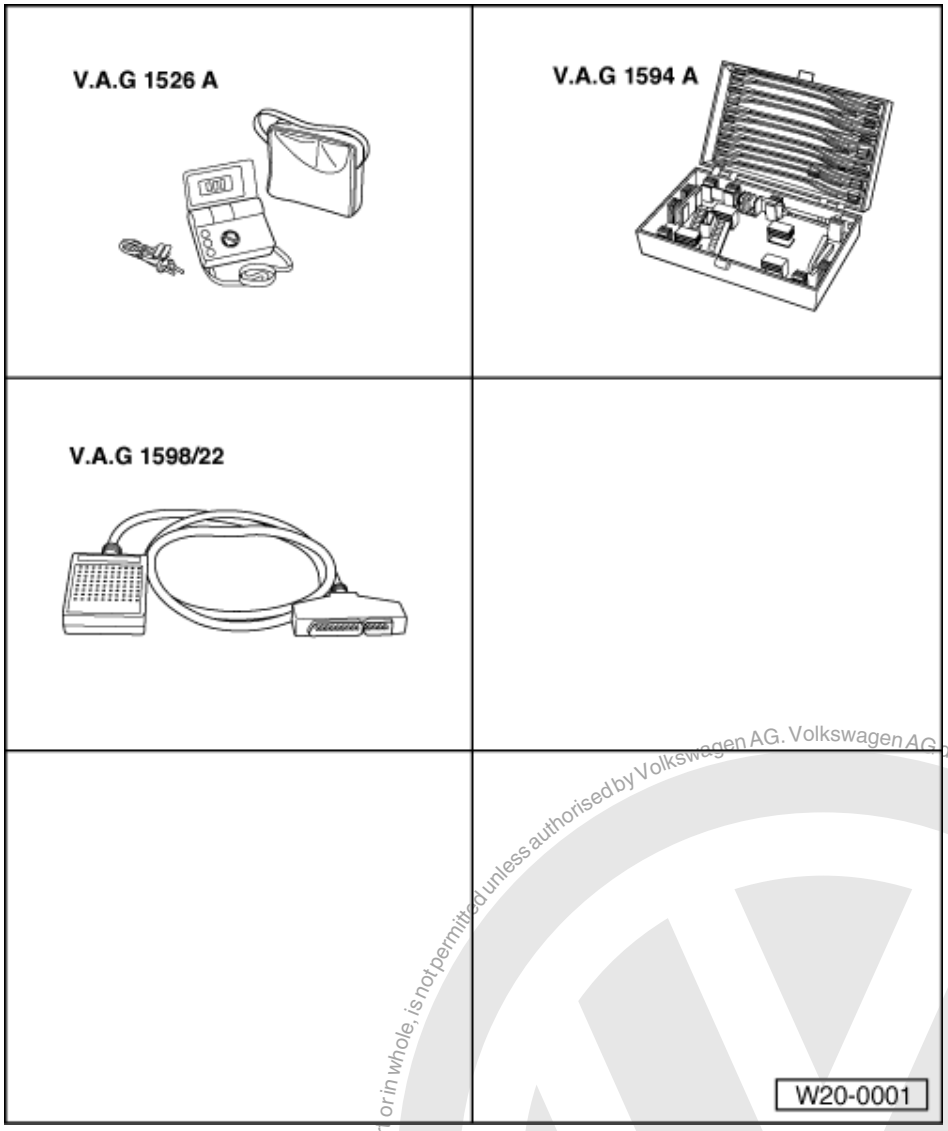

Special tools, workshop equipment, test and measuring appliances and auxiliary items required

- V.A.G 1526 Hand multimeter
- V.A.G 1594 A Adapter set
- V.A.G 1598/22 Test box
- Fault reader V.A.G 1551 or vehicle system tester V.A.G 1552 with cable V.A.G 1551/3
- Current flow diagram

Check conditions

- The fuses must be OK.
- The battery voltage must be at least 11.5 V.

Protected by copyright. Copying for private or commercial purposes, in part or in whole, is not permitted unless authorised by Volkswagen AG. Volkswagen AG does not guarantee or accept any liability with respect to the correctness of information in this document. Copyright by Volkswagen AG.
satelettronica

Test sequence

- Connect fault reader V.A.G 1551 (V.A.G 1552) and with ignition switched on select engine electronics control unit with the "Address word" 01:

=> Repair group 01; Self-diagnosis; Connecting fault reader V.A.G 1551 and selecting engine electronics control unit Self-diagnosis Connecting fault reader V.A.G 1551 and selecting engine electronics control unit

-> Indicated on display:

```
Rapid data transfer      HELP
Select function XXX
```

- Press keys 0 and 8 for the function "Read measured value block" and confirm entry with Q key.

-> Indicated on display:

```
Read measured value block
Input display group number XXX
```

- Press keys 0, 0 and 2 for "Display group number 2" and confirm entry with Q key.

```
Read measured value block 2
0 rpm     0.0 %     0     1     0     18.4 5C
```

-> Check accelerator pedal position display in display zone 2. The accelerator pedal must not be depressed.
Specification: 0.0 %

- Also check the idling speed switch display in display zone 3. The centre position must show 1.
Display: 0 1 0

```
Read measured value block 2
0 rpm     100.0 %     0     0     0
18.4 5C
```

-> Slowly depress accelerator pedal until fully down and observe display zones 2 and 3.

- Display zone 2:
The accelerator pedal position figure must increase continuously.
Specification at full throttle position: 100.0 %
- Display zone 3:
The centre position must change to 0.
Display: 0 0 0

End specification value not achieved:

- Press the ⇒key.
- Press keys 0 and 6 for the function "End output" and confirm entry with the Q key.
- Switch off ignition.
- Adjust accelerator pedal position sender
=>Page 147

Display does not change or is erratic:

- Check accelerator pedal position sender as follows:
- Press the ⇒key.

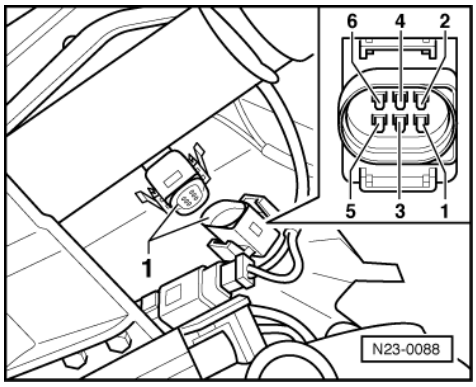

- Press keys 0 and 6 for the function "End output" and confirm entry with the Q key.
- Switch off ignition.

satelettronica
Copyright by Volkswagen AG. Volkswagen AG does not guarantee or accept any liability with respect to the correctness of information in this document. Copying for private or commercial purposes, in part or in whole, is not permitted unless authorised by Volkswagen AG.

- -> Disconnect 6-pin connector -1- for accelerator pedal position sender.

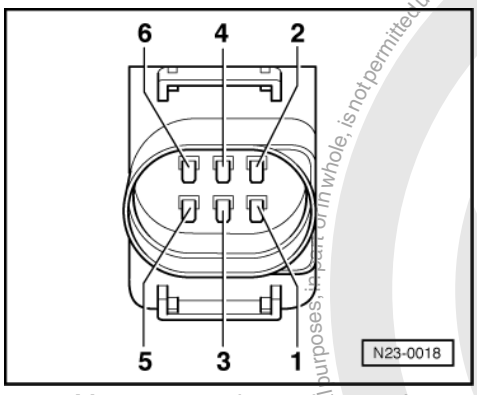

- -> Measure sender resistance between connector contacts 1+3.
  Specification:
  Accelerator pedal in idling speed position: 1.0...1.5 kω
  Accelerator pedal in full throttle position: 1.5...2.5 kω
- Measure sender resistance between connector contacts 2+3.
  Specification:
  Accelerator pedal in idling position: 0.8...1.5 kω
- Check idling speed switch (F60) in accelerator pedal position sender. To do this measure resistance between connector contacts 4+6.
  Specification:
  Accelerator pedal in idling position: max. 1.5 kω
  Accelerator pedal depressed: ∞ ω

If the specifications are not obtained:

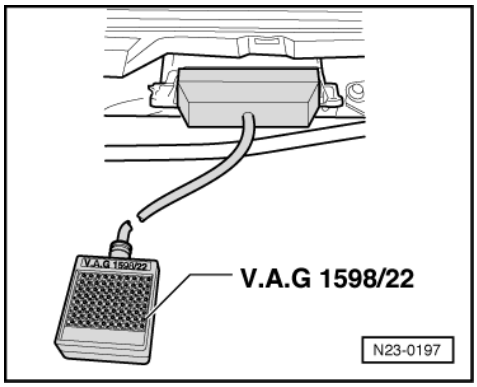

- Replace accelerator pedal position sender (G79)
  =>Page 142 , item 2 .

If the specifications are obtained:

- -> Connect test box V.A.G 1598/22 to control unit wiring harness.

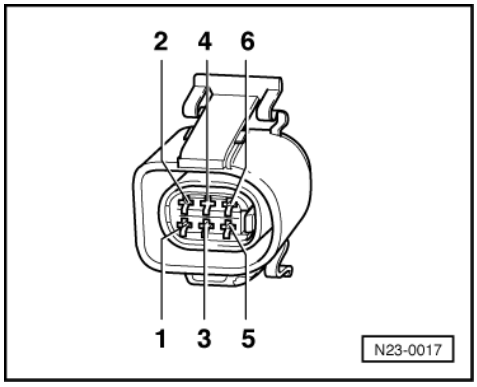

Protected by copyright. Copyright by Volkswagen AG. Volkswagen AG does not guarantee or accept any liability with respect to the correctness of information in this document. Copyright by Volkswagen AG.
satelettronica

- -> Check wiring between test box and connector for open circuit according to current flow diagram.
  Contact 1+ socket 24
  Contact 2+ socket 11
  Contact 3+ socket 23
  Contact 4+ socket 12
  Contact 5+ socket 8
  Contact 6+ socket 25
  Wire resistance: max. 1.5 ω
- Additionally check wires for short to one another, to vehicle earth and to battery positive.
  Specification: ∞ω

If no fault is detected in the wiring:

- Renew Diesel direct injection system control unit (J248)

=> Repair group 23; Renewing engine control unit, coding and matching; Renewing engine control unit Renewing engine control unit, coding and matching Renewing engine control unit

1.10 - Adjusting pedal position sender

Special tools, workshop equipment, testers, measuring instruments and auxiliary items required

- Fault reader V.A.G 1551 (or vehicle system tester V.A.G 1552) with cable V.A.G 1551/3

Check conditions

- The fuses must be OK.
- The battery voltage must be at least 11.5 V.

Test sequence

- Connect fault reader V.A.G 1551 (V.A.G 1552) and with ignition switched on select engine electronics control unit with the "Address word" 01:

=> Repair group 01; Self-diagnosis; Connecting fault reader V.A.G 1551 and selecting engine electronics control unit Self-diagnosis Connecting fault reader V.A.G 1551 and selecting engine electronics control unit

-> Indicated on display:

```
Rapid data transfer      HELP
Select function XXX
```

- Press keys 0 and 8 for the function "Read measured value block" and confirm entry with Q key.

-> Indicated on display:

```
Read measured value block
Input display group number XXX
```

- Press keys 0, 0 and 2 for "Display group number 2" and confirm entry with Q key.

```
Read measured value block 2
0 rpm     0.0 %     0     1     0     18.4 5C
```

-> Check accelerator pedal position display in display zone 2. The accelerator pedal must not be depressed.
Specification: 0.0 %

```
Read measured value block 2
0 rpm     100.0 %     0     0     0
18.4 5C
```

-> Depress accelerator pedal slowly until fully down and observe display zone 2. The value for the accelerator pedal position must increase continuously and reach
100.0 %

Protected by copyright. Copying for private or commercial purposes, in part or in whole, is not permitted unless authorised by Volkswagen AG. Volkswagen AG does not guarantee or accept any liability with respect to the correctness of information in this document. Copyright by Volkswagen AG.
satelettronica

shortly before full throttle stop.

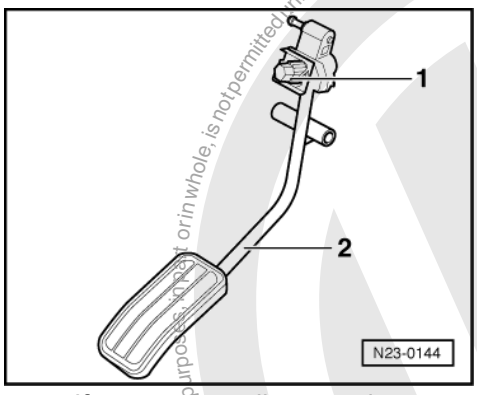

- -> If necessary, adjust accelerator pedal -2- by turning the adjustment screw -1- so that when accelerator pedal is not depressed (idling position)
  0.0 %
  is displayed, and with accelerator pedal depressed to just before full throttle position,
  100.0 %.

Protected by copyright. Copying for private or commercial purposes, in part or in whole, is not permitted unless authorised by Volkswagen AG. Volkswagen AG does not guarantee or accept any liability with respect to the correctness of information in this document. Copyright by Volkswagen AG.
satelettronica

21 - Charging

1 - Charge air system with turbocharger

1.1 - Charge air system with turbocharger

1.2 - Safety precautions

Warning!
When doing any repair work, especially in the engine compartment, pay attention to the following due to the cramped conditions:

- **Route all the various lines (e.g. for fuel, hydraulics, activated charcoal filter system, coolant, refrigerant, brake fluid and vacuum pipes and hoses) and electrical wiring so that the original positions are restored.**
- **Ensure sufficient clearance to all moving or hot components.**

Observe following if test and measuring instruments are required during a test drive:

- Test and measuring instruments must be secured to rear seat and operated by a 2nd person from this location.

  If test and measuring instruments are operated from front passenger's seat and the vehicle is involved in an accident, there is a possibility that the person sitting in this seat may receive serious injuries when the airbag is triggered.

1.3 - Rules for cleanliness

When working on the exhaust gas turbocharger, pay careful attention to the following rules of cleanliness:

- Thoroughly clean all unions and the adjacent areas before disconnecting.
- Place parts that have been removed on a clean surface and cover. Do not use fluffy cloths!
- Carefully cover opened components or seal, if the repair cannot be carried out immediately.
- Only install clean components:
  Only unpack replacement parts immediately prior to installation.
  Do not use parts that have been stored loose (e.g. in tool boxes etc.).
- Existing transport and protective packaging and sealing caps must only be removed immediately prior to installation.
- When repairing remove oil from connection and hose ends.
- When the system is open:
  Do not work with compressed air if this can be avoided.
  Do not move vehicle unless absolutely necessary.

1.4 - Removing and installing turbocharger with attachments

Observe safety precautions=> Page 149 .

Observe rules for cleanliness => Page 149 .

Protected by copyright. Copying for private or commercial purposes, in part or in whole, is not permitted unless authorised by Volkswagen AG. Volkswagen AG does not guarantee or assume any liability with respect to the correctness of information in this document. Copyright by Volkswagen AG.
satelettronica

Notes:

- All hose connections are secured with clamps and/or securing clips.

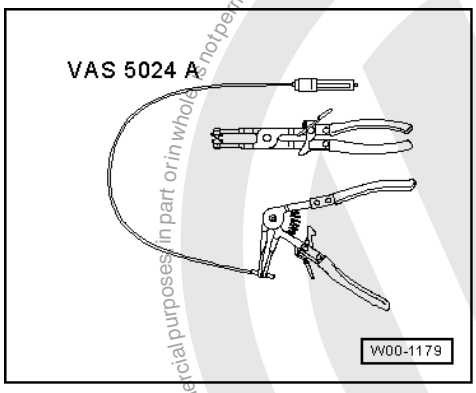

- VAS 5024 A pliers are recommended when installing spring-type clips.
- Do not install hose connections with lubricant containing oil.
- Charge air system must be free of leaks.
- Before screwing on oil supply pipe fill turbocharger at connection with engine oil.
- After installing turbocharger run engine for approx. 1 minute at idling speed, do not rev engine. This ensures that the turbocharger is adequately lubricated.
- Renew self-locking nuts.

Engine code AGR =>Page 151

Engine code ALH, ASV =>Page 156

Protected by copyright. Copyright by Volkswagen AG. Volkswagen AG does not guarantee or accept any liability with respect to the correctness of information in this document. Copyright by Volkswagen AG. Reproduction for commercial purposes in part or in whole is not permitted unless authorized by Volkswagen AG.
satelettronica

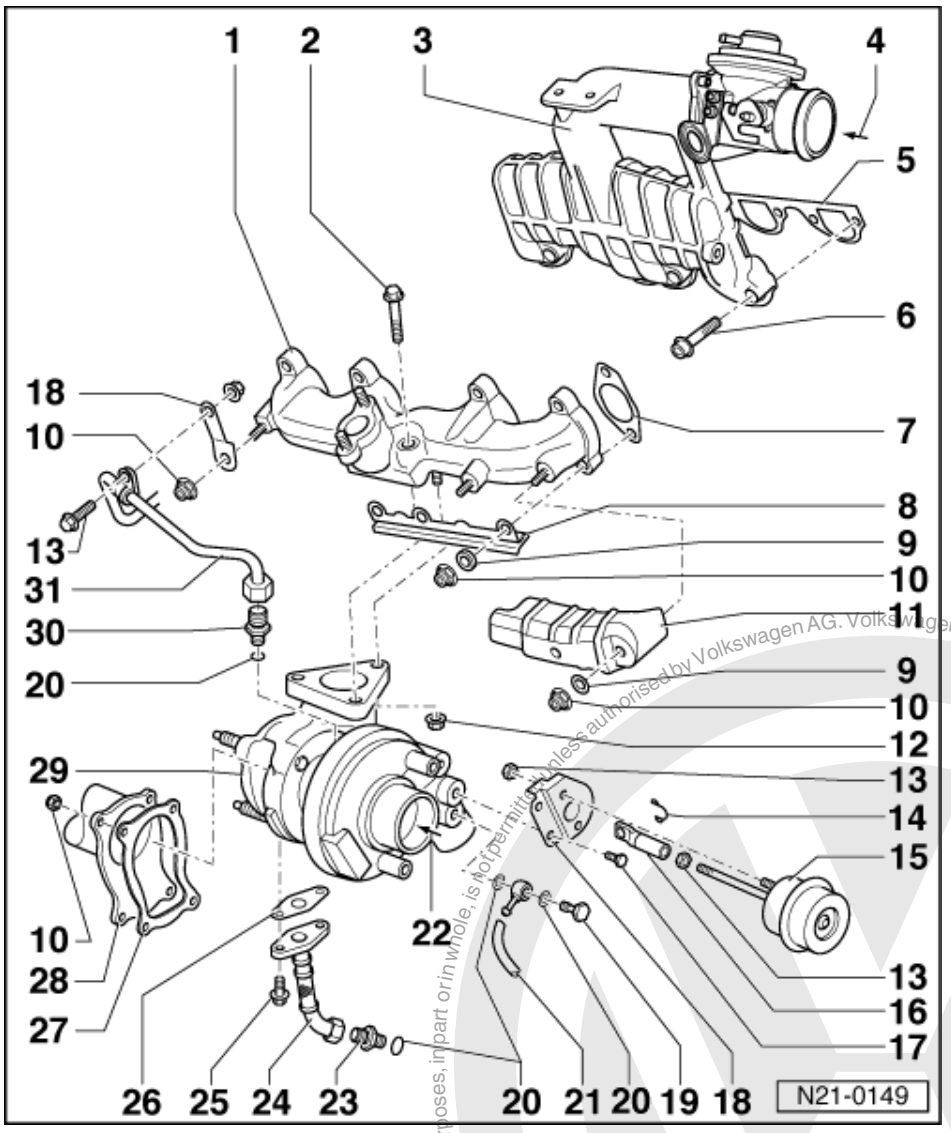

Engine code AGR

1 Exhaust manifold
2 30 Nm
- Renew
- Coat threads and bolt head seating surface with G000500

3 Intake manifold
4 From charge air cooler
5 Gasket
- Renew
- Coating (beading) towards intake manifold

6 25 Nm
7 Gasket
- Note installation position

8 Bracket
- For heat shield item 11

9 Washer

Protected by copyright. Copying for private or commercial purposes, in part or in whole, is not permitted unless authorised by Volkswagen AG. Volkswagen AG does not guarantee or accept any liability with respect to the correctness of information in this document. Copyright by Volkswagen AG.
satelettronica

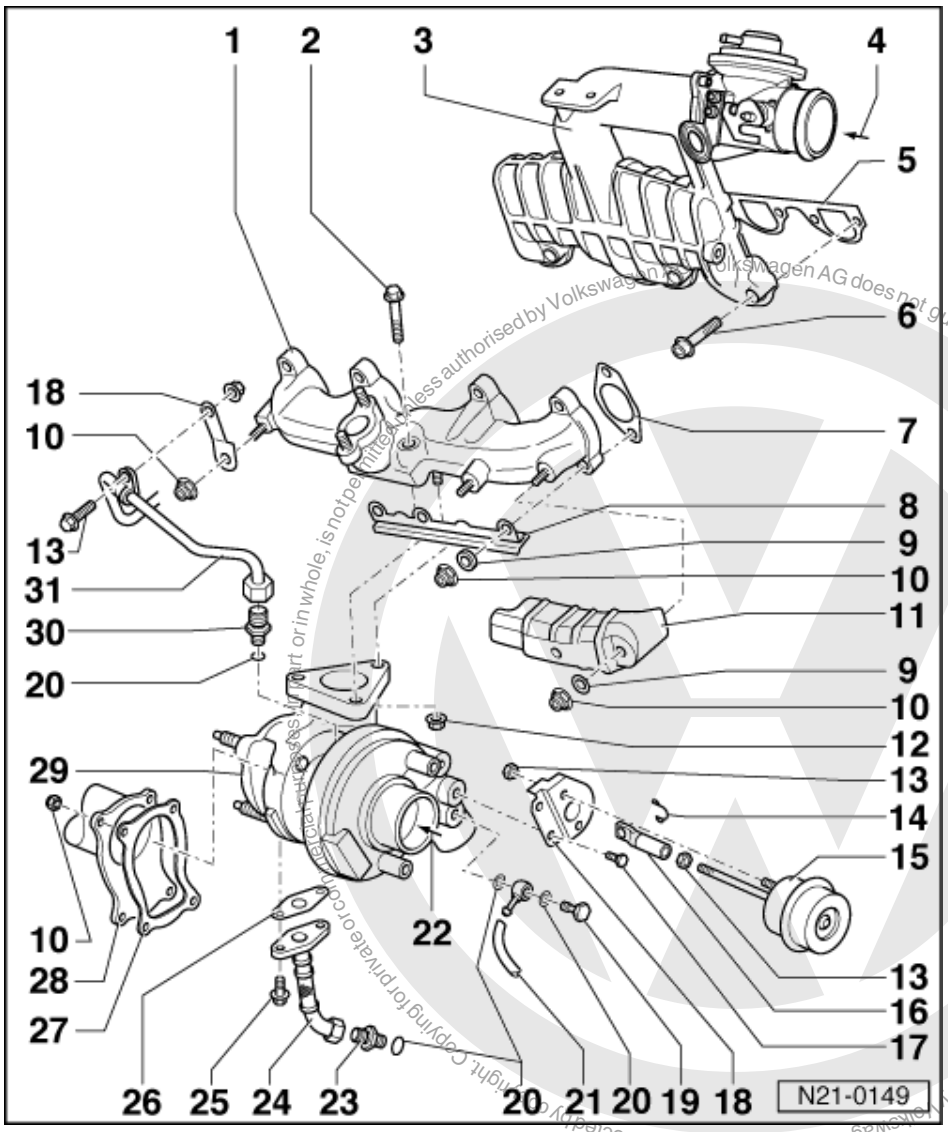

10 25 Nm
- Renew

11 Heat shield
- Engage in bracket item 8

12 25 Nm
- Renew
- Coat threads and bolt head seating surface with G000500

13 10 Nm

14 Circlip

15 Pressure unit
- For charge pressure regulating valve
- Checking =>Page 164
- Removing and installing
  => Page 165

16 Operating rod

17 10 Nm
- Install with D6

18 Retainer

satelettronica

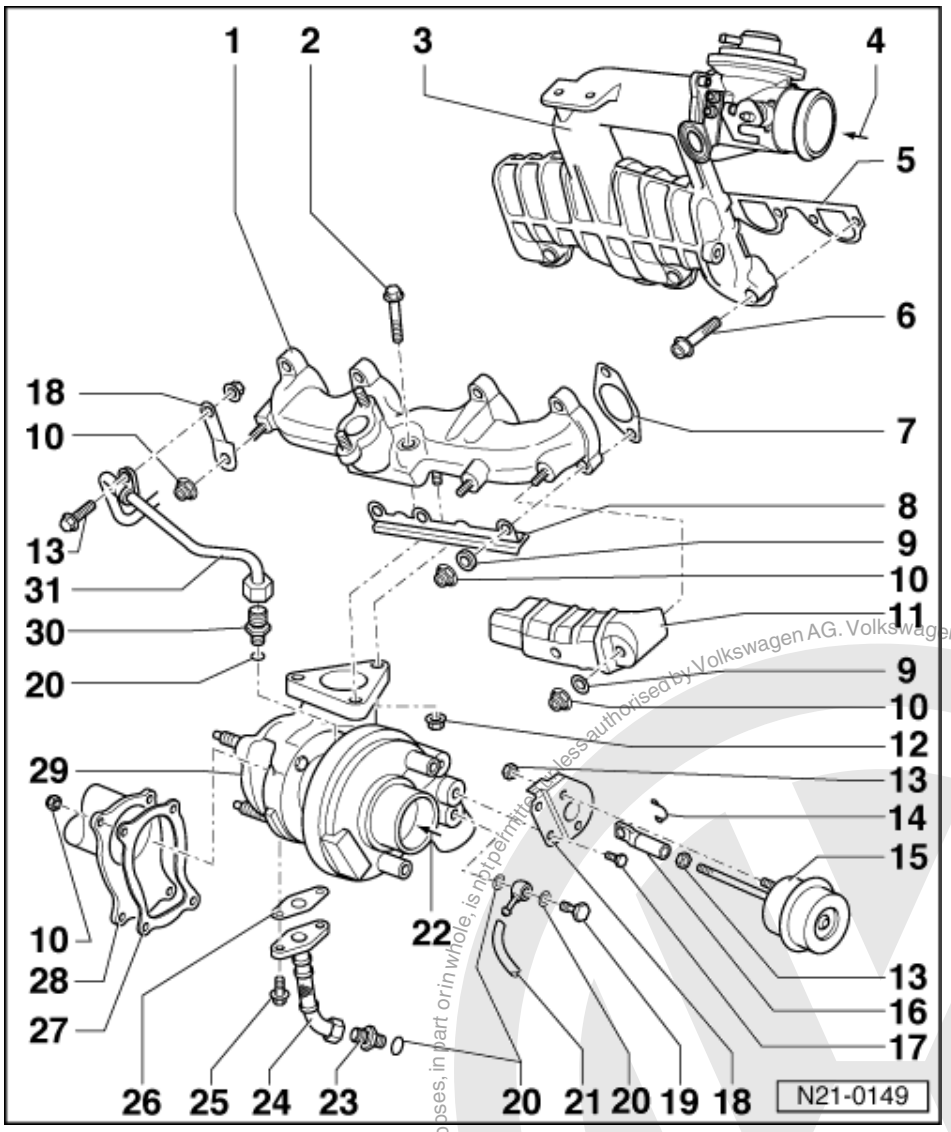

19 Banjo bolt, 15 Nm

20 Seal

- Renew

21 Hose

- To charge pressure control solenoid valve (N75) => Page 163 , turbocharger hose connections

22 From air cleaner

23 Connection, 40 Nm

- For oil return pipe from turbocharger

24 Oil return pipe, 30 Nm

- To cylinder block

25 15 Nm

26 Gasket

- Renew

Protected by copyright. Copying for private or commercial purposes, in part or in whole, is not permitted unless authorised by Volkswagen AG. Volkswagen AG does not guarantee or accept any liability with respect to the correctness of information in this document. Copyright by Volkswagen AG.
satelettronica

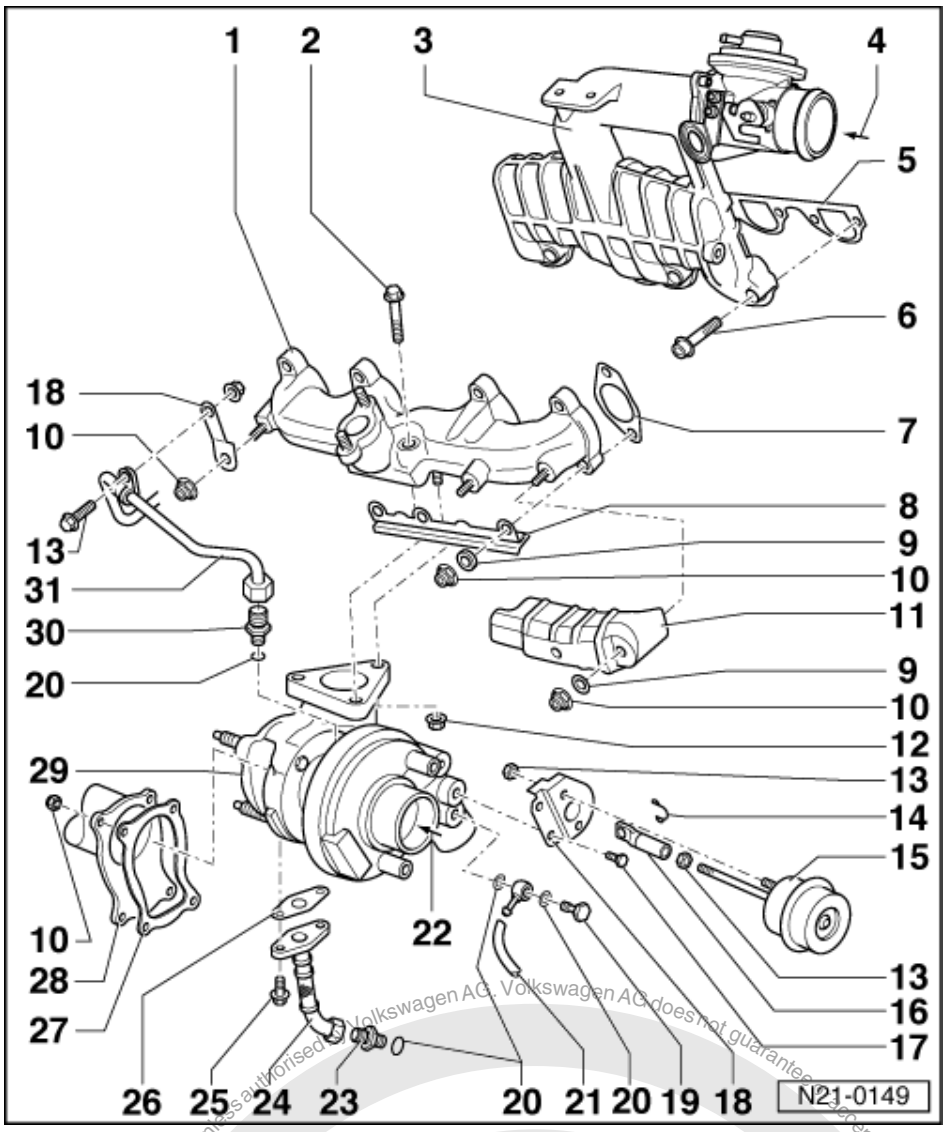

27 Gasket

- Renew

28 Front exhaust pipe

29 Turbocharger

- The turbocharger is removed out towards the top
- To remove the turbocharger, disconnect turbocharger/air cleaner connector pipes and turbocharger/ charge air cooler connector pipes
- Checking charge pressure control
  => Page 166

30 Connection, 30 Nm

- Renew
- Coat threads and bolt head seating surface with "G 052 112 A3"
- Fill connection with engine oil before screwing on oil supply pipe.

Protected by copyright. Copying for private or commercial purposes, in part or in whole, is not permitted unless authorised by Volkswagen AG. Volkswagen AG does not guarantee or accept any liability with respect to the correctness of information in this document. Copyright by Volkswagen AG.
satelettronica

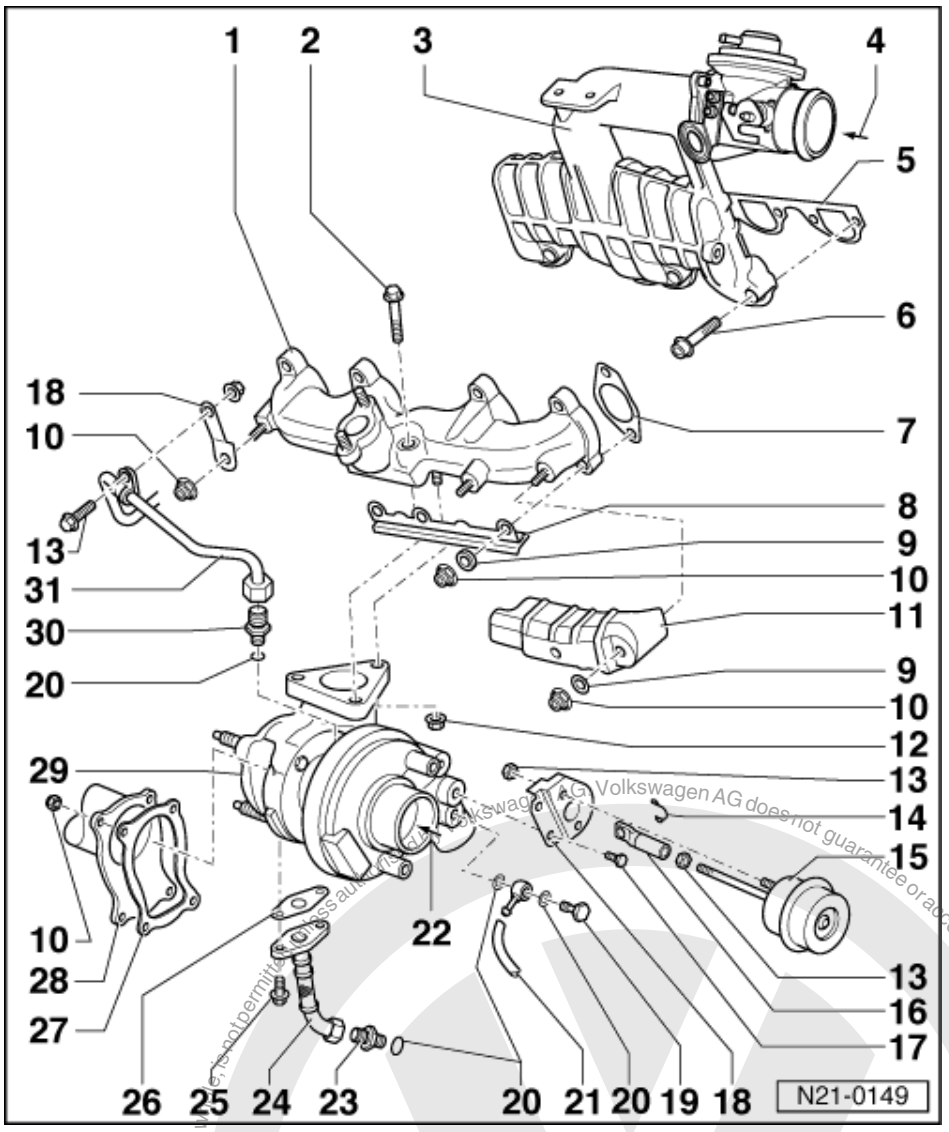

31 Oil supply pipe

- From oil filter bracket
  => Page 98 , item 16
- Fill connection with engine oil before screwing on oil supply pipe.
- Removing and installing =>page 100

Protected by copyright. Copying for private or commercial purposes, in part or in whole, is not permitted unless authorised by Volkswagen AG. Volkswagen AG does not guarantee or accept any liability with respect to the correctness of information in this document. Copyright by Volkswagen AG.
satelettronica

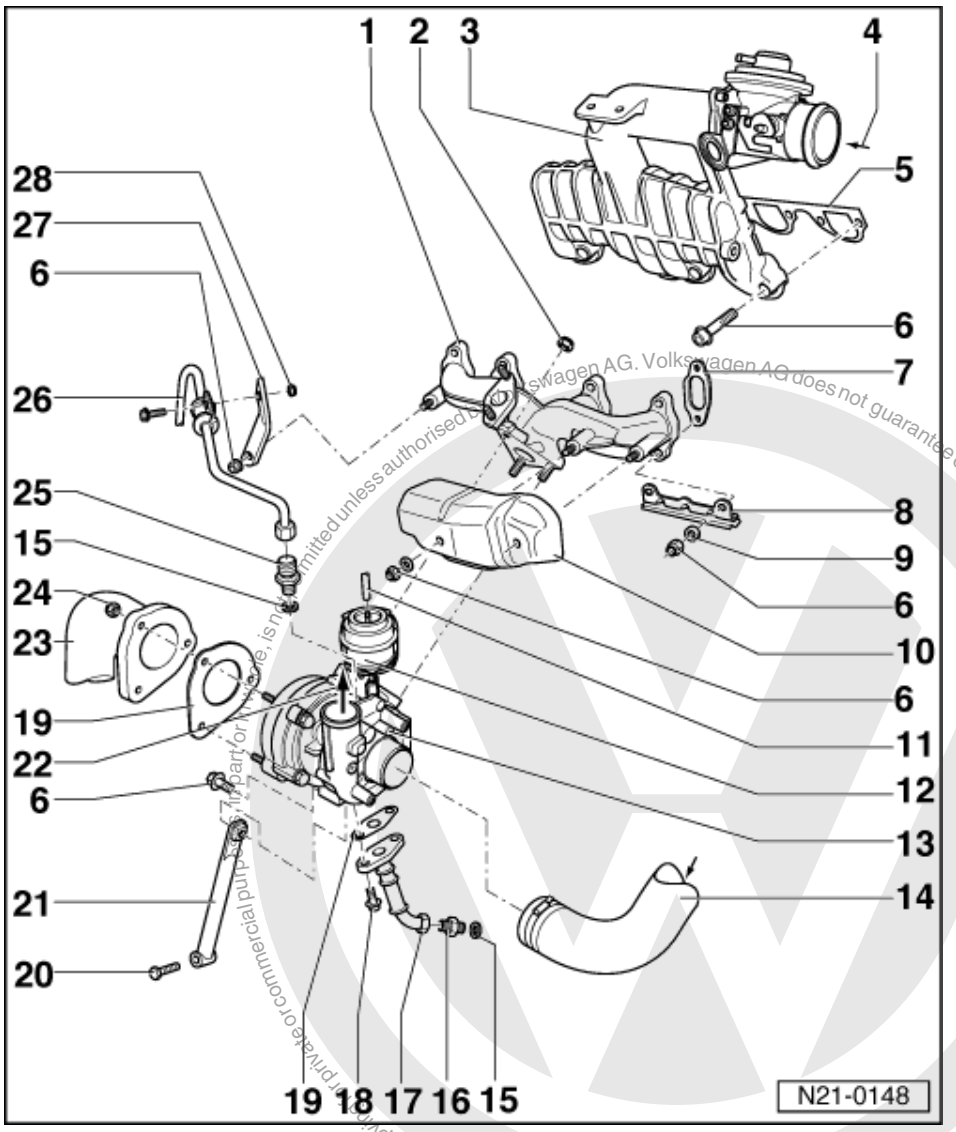

Engine code ALH, ASV

1 Exhaust manifold
2 25 Nm
- Renew
- Coat threads and bolt head seating surface with G 000 500

3 Intake manifold
4 From charge air cooler
5 Gasket
- Renew
- Coating (beading) towards intake manifold

6 25 Nm
7 Gasket
- Note installation position

8 Bracket
- For heat shield item 10

Protected by copyright. Copyright by Volkswagen AG.

satelettronica

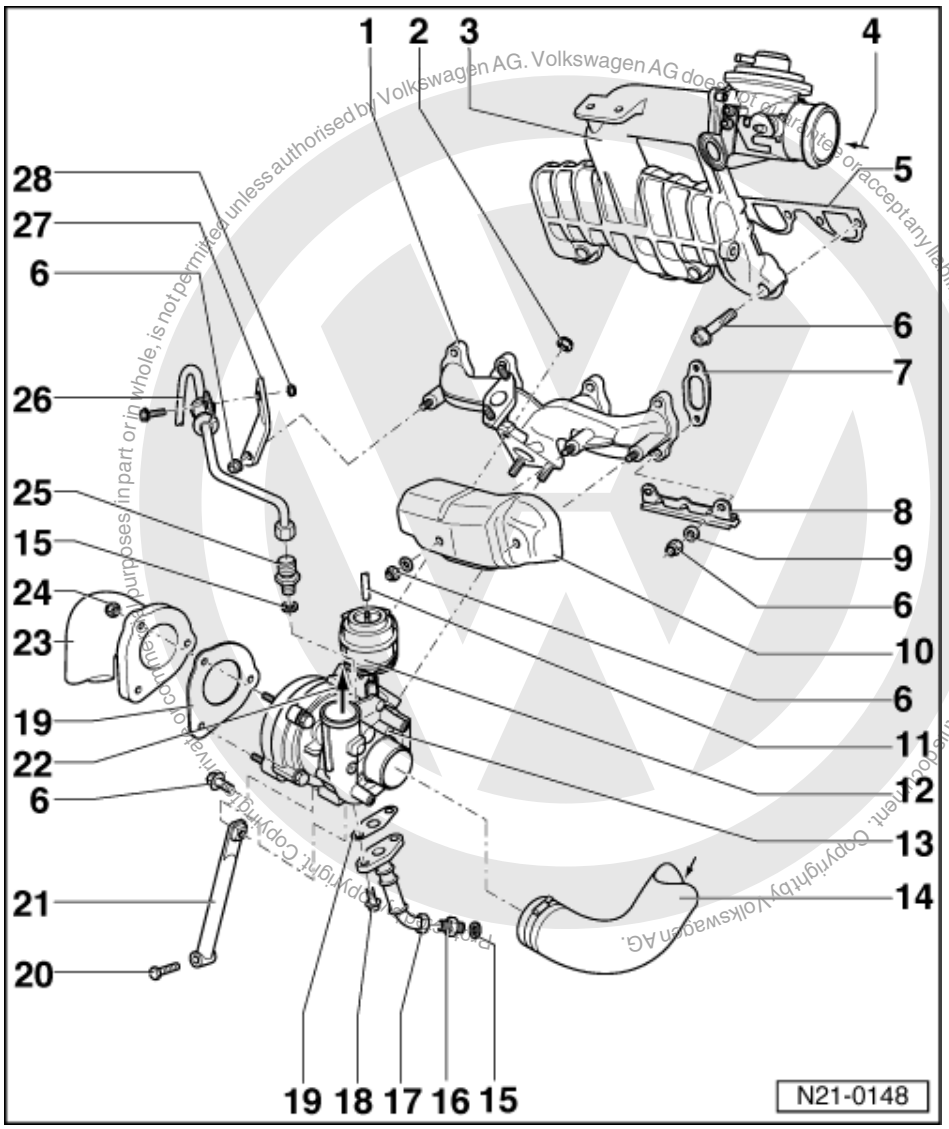

9 Washer

10 Heat shield

- Engage in bracket item 8

11 Hose

- To charge pressure control solenoid valve (N75) => Page 163 , turbocharger hose connections

12 Pressure unit

- For charge pressure control
- Integral part of turbocharger cannot be replaced

13 Turbocharger

- The turbocharger is removed out towards the top
- To remove the turbocharger, disconnect turbocharger/air cleaner connector pipes and turbocharger/ charge air cooler connector pipes
- Checking charge pressure control
  => Page 166

satelettronica

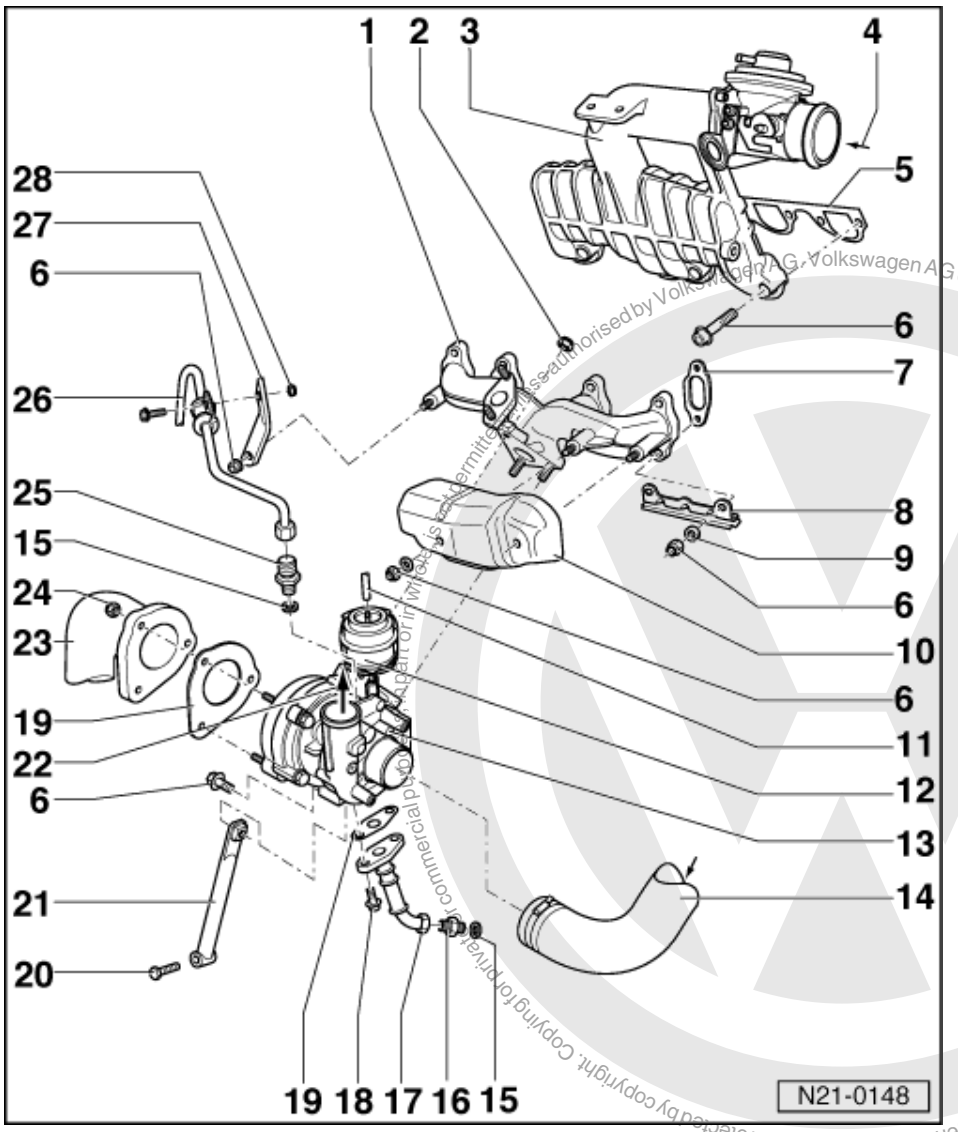

14 From air cleaner
15 Seal
- Renew

16 Connection, 40 Nm
- For oil return pipe from turbocharger

17 Oil return pipe, 30 Nm
- To cylinder block

18 15 Nm
19 Gasket
- Renew

20 40 Nm
21 Retainer
22 To charge air cooler
23 Front exhaust pipe
24 25 Nm

Protected by copyright. Copying for private or commercial purposes, in whole or in part, is not permitted unless authorised by Volkswagen AG. Volkswagen AG does not guarantee or accept any liability with respect to the correctness of information in this document. Copyright by Volkswagen AG.
satelettronica

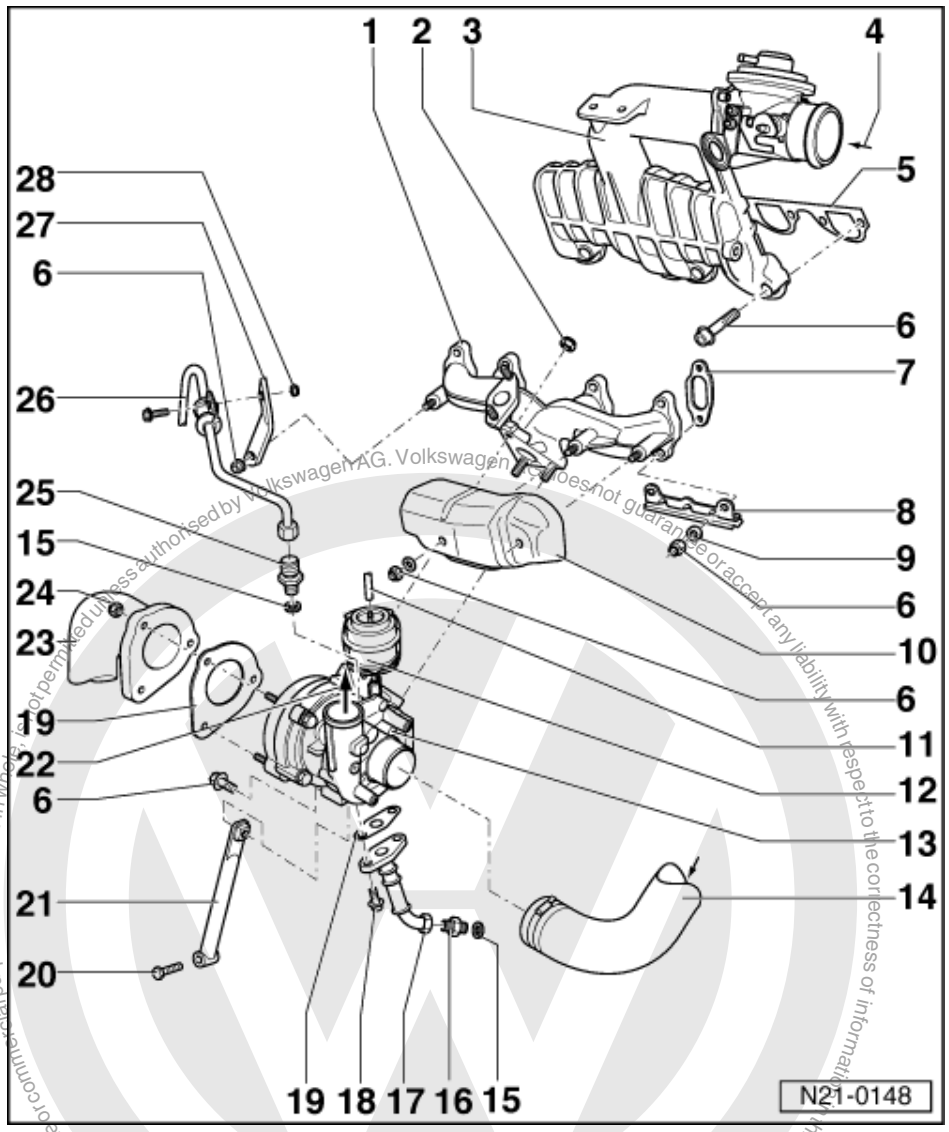

25 Connection, 30 Nm

- Renew
- Coat threads and bolt head seating surface with "G 052 112 A3"
- Fill connection with engine oil before screwing on oil supply pipe.

26 Oil supply pipe

- From oil filter bracket
  => Page 98 , item 16
- Fill connection with engine oil before screwing on oil supply pipe.
- Removing and installing =>page 100

27 Retainer

- For oil supply hose/pipe

28 10 Nm

satelettronica

1.5 - Removing and installing parts of charge air cooling

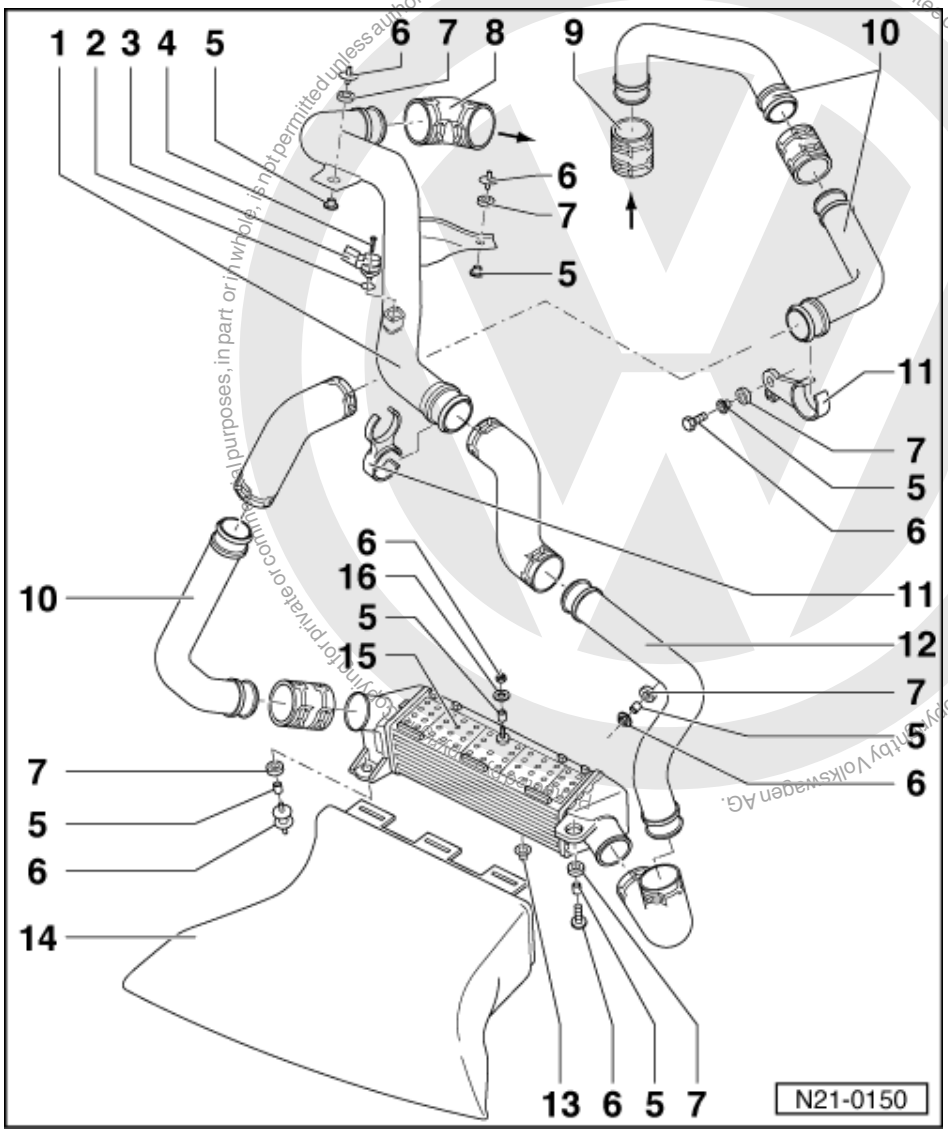

Notes:

- Charge air system must be free of leaks.
- All hose connections are secured by spring-type clips.
- Hose clip pliers VAS 5024 or V.A.G 1921 are recommended when installing spring-type clips.

1 Connecting pipe
  - Charge air cooler/intake manifold
2 O-ring
  - Renew if damaged
3 Intake manifold temperature sender (G72)
4 5 Nm
5 Spacer sleeve

Volkswagen AG. Volkswagen AG does not guarantee or accept any liability with respect to the correctness of information in this document. Copyright by Volkswagen AG.
Copying for private or commercial purposes, in part or in whole, is not permitted unless authorised by Volkswagen AG.
satelettronica

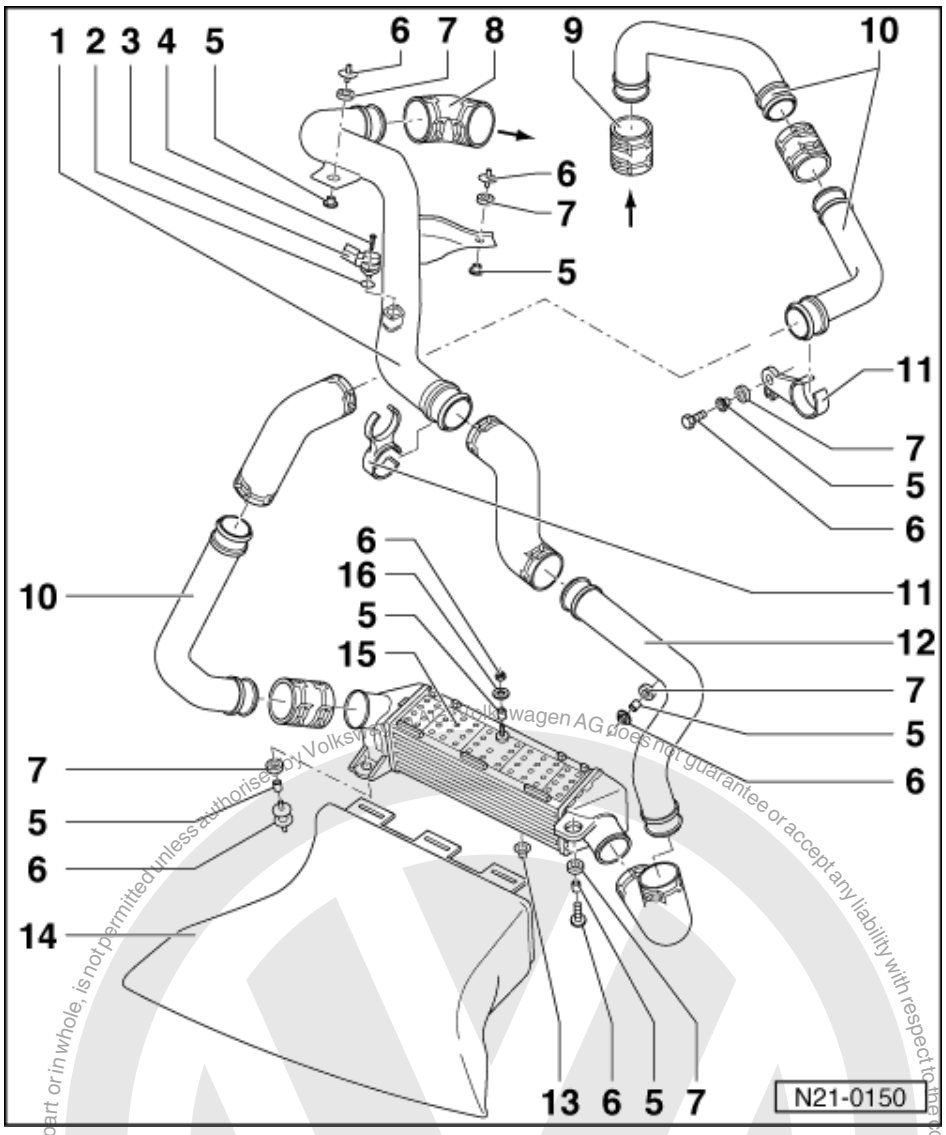

6 10 Nm
7 Rubber grommet
8 To intake pipe
9 From exhaust gas turbocharger
10 Connecting pipe
- Charge air cooler/turbocharger

11 Bracket
12 Connecting pipe
- Charge air cooler/intake manifold
- To remove engine with support device 10-222A, tension slightly and remove left engine mounting. => Page 12 , Renewing bonded rubber bushes in subframe

13 Retaining pin
- For noise insulation tray

satelettronica

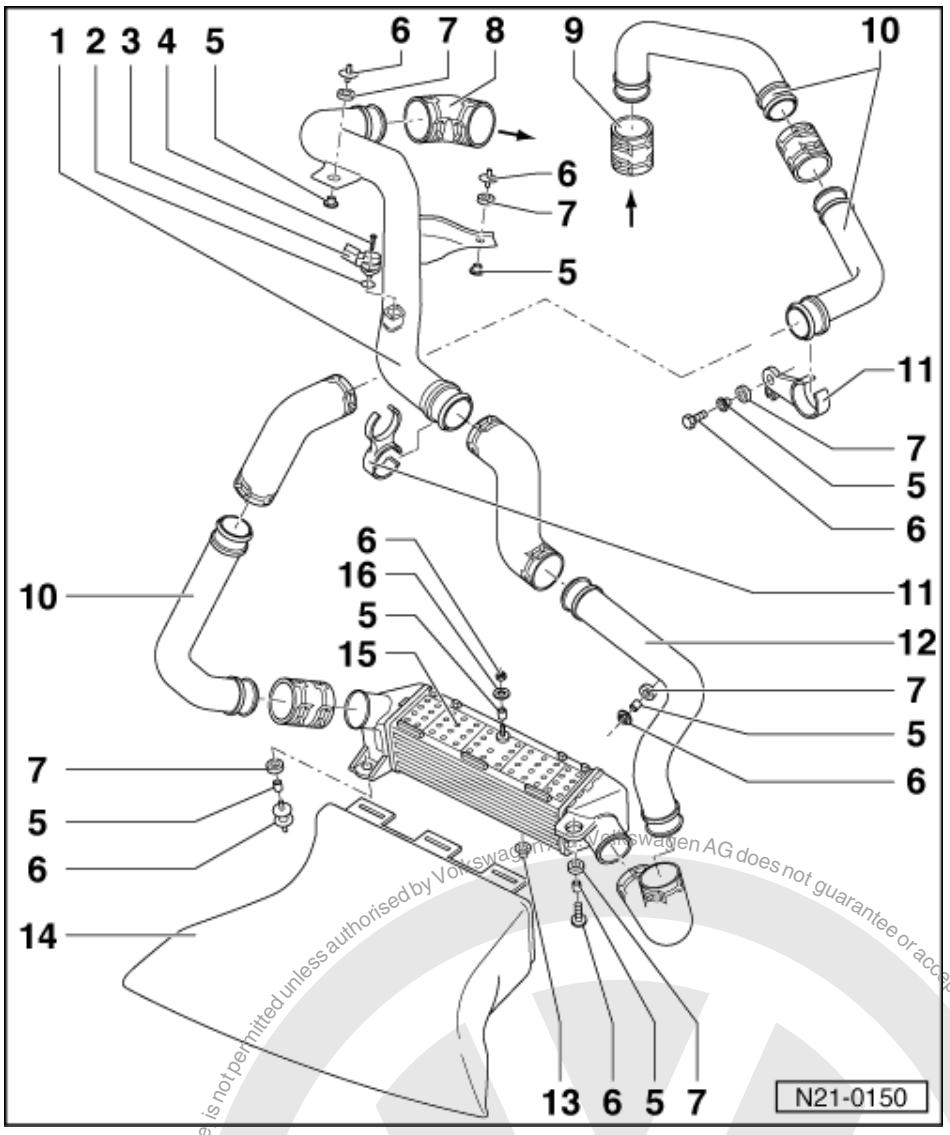

14 Air ducting
15 Charge air cooler
16 Washer

Protected by copyright. Copying for private or commercial purposes, in part or in whole is not permitted unless authorised by Volkswagen AG. Volkswagen AG does not guarantee or accept any liability with respect to the correctness of information in this document. Copyright by Volkswagen AG.
satelettronica

1.6 - Turbocharger hose/pipe connections

Engine code AGR

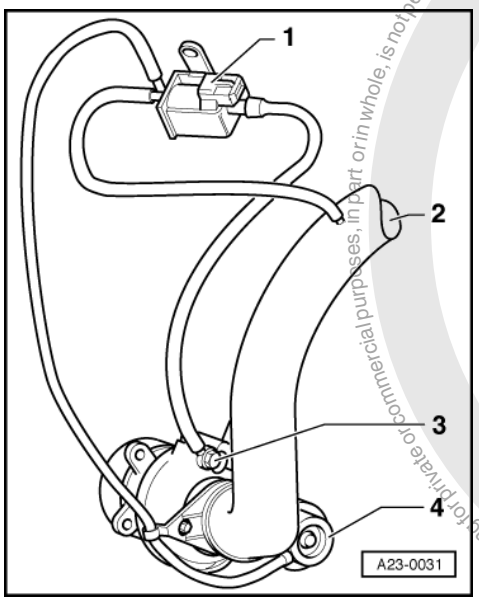

1 - -> Charge pressure control solenoid valve (N75)
2 - Air pipe from air cleaner
3 - Exhaust turbocharger with connector for charge pressure control
4 - Pressure unit for charge pressure regulating valve

Engine code ALH, ASV

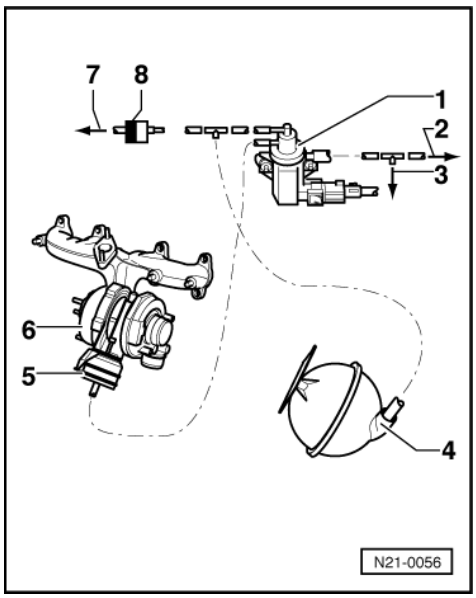

1 - -> Charge pressure control solenoid valve (N75)
2 - To exhaust gas recirculation valve (N18)
3 - To air cleaner
4 - Vacuum reservoir
5 - Charge pressure control valve pressure unit
6 - Exhaust turbocharger
7 - To intake manifold flap change-over valve (N239)
8 - Non-return valve, white connection faces charge pressure control solenoid valve (N75)

Volkswagen AG. Volkswagen AG does not guarantee or accept any liability with respect to the correctness of information in this document. Copyright by Volkswagen AG. Protected by copyright. Copying for private or commercial purposes, in part or in whole, is not permitted unless authorised by Volkswagen AG.
satelettronica

2 - Checking charge pressure system

2.1 - Checking charge pressure system

2.2 - Checking pressure unit for charge pressure regulating valve

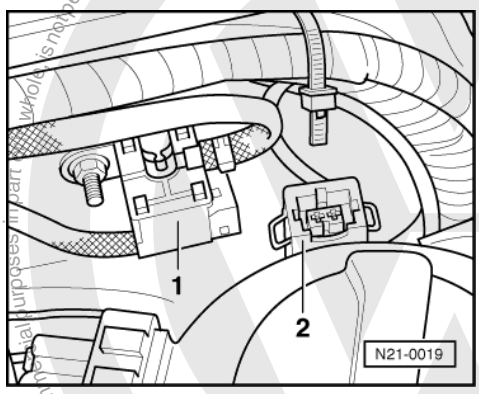

(Only engine code AGR)

Check conditions

- Engine oil temperature min. 80 °C

Test sequence

- -> Pull off charge pressure control solenoid valve (N75) -1- connectors -2-.

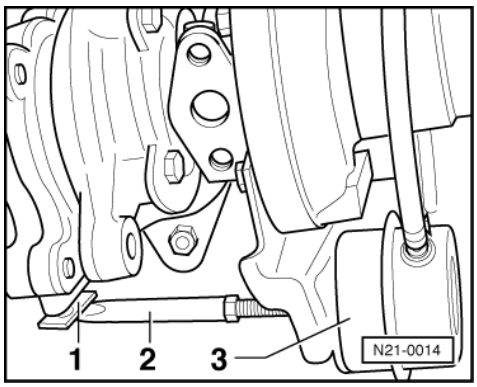

- -> Start engine and raise to maximum speed briefly by operating throttle. The operating rod -2- for charge pressure regulating valve must move.

If the operating rod does not move:

- Check charge pressure regulating valve lever -1- for ease of movement. When corroded together, renew turbocharger.

If the operating rod does not move, even though the lever is free to move:

- Renew pressure unit for charge pressure regulating valve -3-.

Whole manual is not permitted unless authorised by Volkswagen AG. Volkswagen AG does not guarantee or accept any liability with respect to the correctness of information in this document. Copyright by Volkswagen AG. Protected by copyright. Copying for private or commercial purposes, in part or in whole, is not permitted unless authorised by Volkswagen AG.
satelettronica

Protected by copyright. Copyright by Volkswagen AG. Volkswagen AG does not guarantee or accept any liability with respect to the correctness of information in this document. Copyright by Volkswagen AG. Reproduction, in whole or in part, for commercial purposes, in part or in whole, is not permitted unless authorised by Volkswagen AG.

2.3 - Removing and installing pressure unit for charge pressure regulating valve

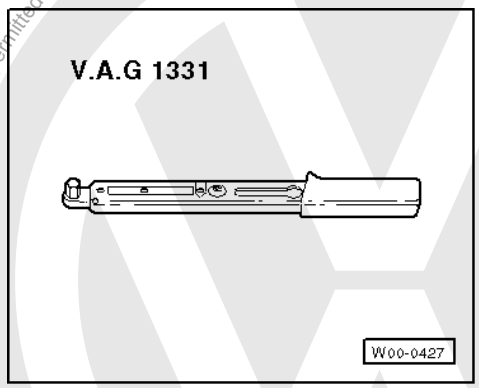

(Only engine code AGR)

Special tools, workshop equipment, testers, measuring instruments and auxiliary items required

- -> V.A.G 1331 Torque wrench (5...50 Nm)

Removing

- Remove turbocharger.

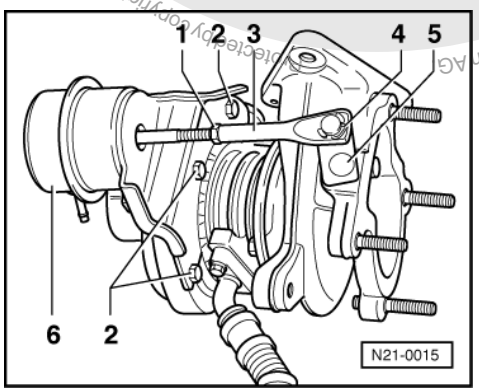

- -> Unclip securing clip -4-.
- Remove securing bolts -2-.
- Take pressure unit -6- off.

Installing

- Install pressure unit -6- on turbocharger and tighten to 10 Nm.
  Install securing bolts -2- with D 6.
- Loosen operating rod -3- lock nut -1-.

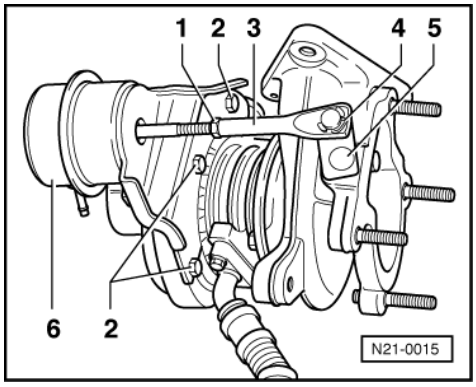

satelettronica

- -> Swing charge pressure control valve lever -5- in towards pressure unit onto stop and hold.
- Adjust rod length -3- so that the rod eye will fit easily on lever pin -5-. (Lever lies against stop with no play).
- From this position, turn operating rod in
  8 full turns
  (Rod shortens).
- Tighten lock nut -1-.
- Fit operating rod on to lever and install securing clip -4-.
- Install turbocharger.

Protected by copyright. Copying for private or commercial purposes, in part or in whole, is not permitted unless authorised by Volkswagen AG. Volkswagen AG does not guarantee or accept any liability with respect to the correctness of information in this document. Copyright by Volkswagen AG.

2.4 - Checking charge pressure control

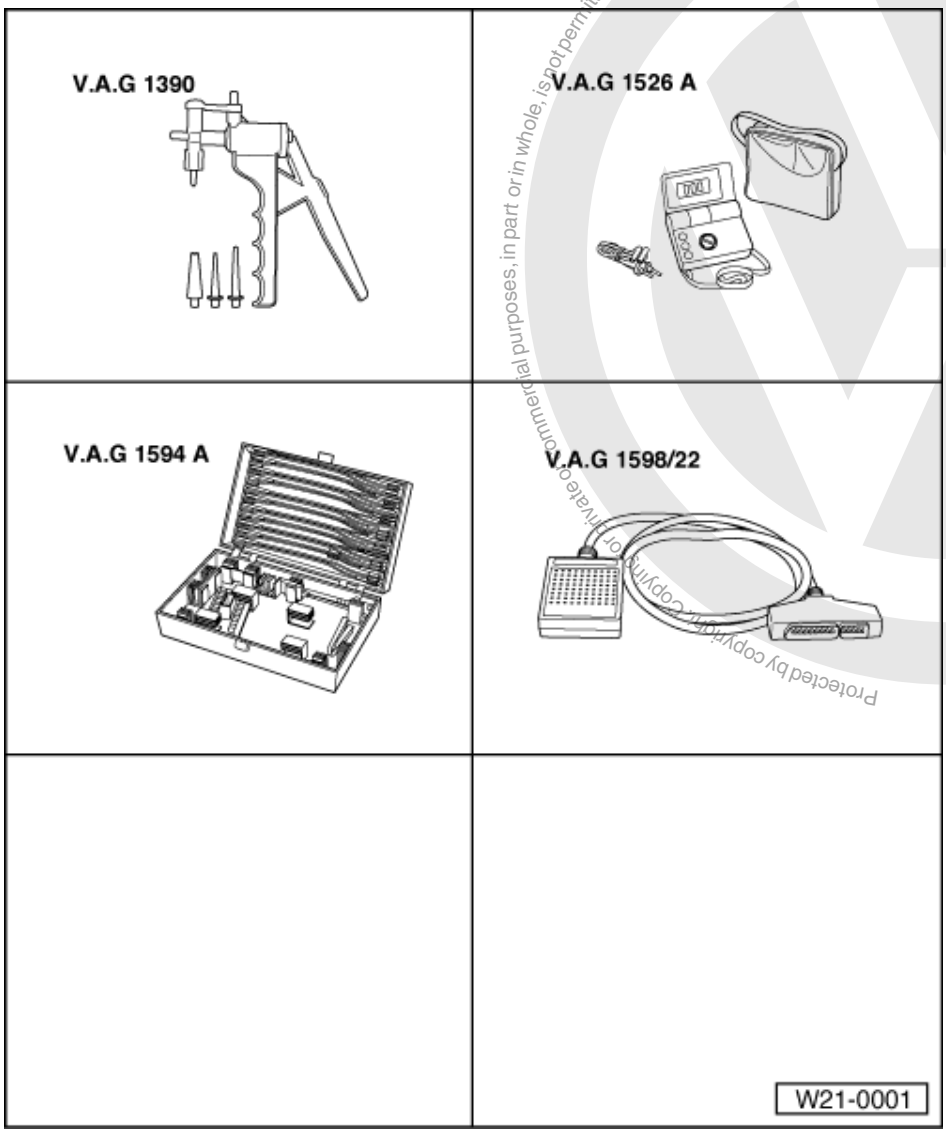

Special tools, workshop equipment, test and measuring appliances and auxiliary items required

- V.A.G 1390 Vacuum pump
- V.A.G 1526 Hand multimeter
- V.A.G 1594 A Adapter set
- V.A.G 1598/22 Test box
- Fault reader V.A.G 1551 or vehicle system tester V.A.G 1552 with cable V.A.G 1551/3
- Current flow diagram

satelettronica

Engine code AGR

Engine code ALH, ASV =>Page 169

To enable the charge pressure control to be checked it is essential that the charge pressure is first determined with charge pressure control deactivated.

Check conditions

- No fault stored in fault memory

=> Repair group 01; Self-diagnosis; Interrogating fault memory Self-diagnosis Interrogating fault memory

- No leaks on intake and exhaust systems.
- Control pipe to charge pressure regulating valve is not blocked, loose or leaking.
- No faults in engine and fuel injection system, e.g. commencement of injection, injectors and compression pressure.
- Engine oil temperature min. 80 °C

Test sequence

Observe following if test and measuring instruments are required during a test drive:

◆ Test and measuring instruments must be secured to rear seat and operated by a 2nd person from this location.

If test and measuring instruments are operated from front passenger's seat and the vehicle is involved in an accident, there is a possibility that the person sitting in this seat may receive serious injuries when the airbag is triggered.

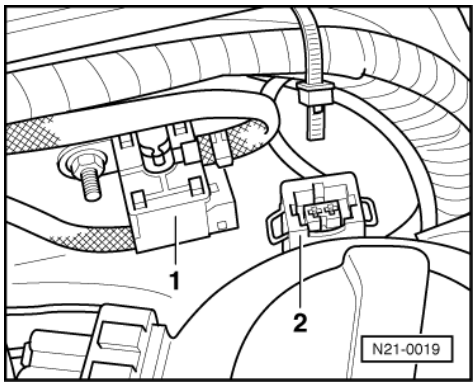

- The charge pressure is measured with the fault reader V.A.G 1551 during a test drive.
- -> Pull off charge pressure control solenoid valve (N75) -1- connectors -2-.
- With engine running at idle speed, connect fault reader V.A.G 1551 (V.A.G 1552) and select engine electronics control unit with the "Address word" 01:

=> Repair group 01; Self-diagnosis; Connecting fault reader V.A.G 1551 and selecting engine electronics control unit Self-diagnosis Connecting fault reader V.A.G 1551 and selecting engine electronics control unit

-> Indicated on display:

```
Rapid data transfer      HELP
Select function XXX
```

- Press keys 0 and 8 for the function "Read measured value block" and confirm entry with Q key.

-> Indicated on display:

```
Read measured value block
Input display group number XXX
```

- Press keys 0, 1 and 1 for display group 11 and confirm entry by pressing Q.

```
Read measured value block 11
840 rpm      938 mbar      978 mbar      92 %
```


Copyright: Copying for private or commercial purposes, in part or in whole, is not permitted unless authorised by Volkswagen AG. Volkswagen AG does not guarantee or accept any liability with respect to the correctness of information in this document. Copyright by Volkswagen AG.
satelettronica

-> Indicated on display:
- Accelerate vehicle in 3rd gear from about 1500 rpm using full throttle.
- Press PRINT key on V.A.G 1551 at approx. 3000 rpm.

-> Specification in display zone 3: 1550...1750 mbar

```
Read measured value block 11
3090 rpm     1866 mbar     1650 mbar
62 %
```

If the charge pressure is not attained:

- Check charge pressure control valve pressure unit and renew if necessary.
- Check vacuum hoses => Page 163 .
- Repeat charge pressure check.

If the charge pressure has still not been attained:

- Replace turbocharger.

If the charge pressure is exceeded:

- Test charge pressure control solenoid valve (N75). (Through-flow in hose from turbocharger via valve to pressure unit when connector is pulled off).
- Check vacuum hoses => Page 163 .
- Check charge pressure control valve pressure unit as well as the operating rod and renew if necessary.
- Check shaft mounting for charge pressure regulating valve in turbocharger for ease of movement. When corroded together, renew turbocharger.
- If the measured charge pressure is OK., repeat charge pressure measurement with charge pressure control active:
- Connector connected to solenoid valve charge pressure control -N75.
- With engine running at idle speed, connect fault reader V.A.G 1551 (V.A.G 1552) and select engine electronics control unit with the "Address word" 01:

=> Repair group 01; Self-diagnosis; Connecting fault reader V.A.G 1551 and selecting engine electronics control unit Self-diagnosis Connecting fault reader V.A.G 1551 and selecting engine electronics control unit

-> Indicated on display:

```
Rapid data transfer     HELP
Select function XXX
```

- Press keys 0 and 8 for the function "Read measured value block" and confirm entry with Q key.

-> Indicated on display:

```
Read measured value block
Input display group number XXX
```

- Press keys 0, 1 and 1 for display group 11 and confirm entry by pressing Q.

```
Read measured value block 11
840 rpm     938 mbar     978 mbar     92 %
```

-> Indicated on display:
- Accelerate vehicle in 3rd gear from about 1500 rpm using full throttle.
- Press PRINT key on V.A.G 1551 at approx. 3000 rpm.

-> Specification on V.A.G 1551: 1650...2000 mbar (in display zone 3)

```
Read measured value block 11
3090 rpm     1866 mbar     1917 mbar
62 %
```

If the specification is not obtained:

- Check solenoid valve for charge pressure control (N75) => Page 170
- Check vacuum hoses => Page 163 .

Protected by copyright. Copying for private or commercial purposes, in part or in whole, is not permitted unless authorised by Volkswagen AG. Volkswagen AG does not guarantee or accept any liability with respect to the correctness of information in this document. Copyright by Volkswagen AG.
satelettronica

Engine code ALH, ASV

Check conditions

- No fault stored in fault memory

=> Repair group 01; Self-diagnosis; Interrogating fault memory Self-diagnosis Interrogating fault memory

- No leaks on intake and exhaust systems.
- No faults in engine and fuel injection system, e.g. commencement of injection, injectors and compression pressure.
- Engine oil temperature min. 80 °C

Test sequence

Observe following if test and measuring instruments are required during a test drive:

◆ Test and measuring instruments must be secured to rear seat and operated by a 2nd person from this location.

If test and measuring instruments are operated from front passenger's seat and the vehicle is involved in an accident, there is a possibility that the person sitting in this seat may receive serious injuries when the airbag is triggered.

- Connect fault reader V.A.G 1551 (V.A.G 1552) and select engine electronics control unit with the "Address word" 01. When doing this the engine must be running at idling speed.

=> Repair group 01; Self-diagnosis; Connecting fault reader V.A.G 1551 and selecting engine electronics control unit Self-diagnosis Connecting fault reader V.A.G 1551 and selecting engine electronics control unit

-> Indicated on display:

```
Rapid data transfer      HELP
Select function XXX
```

- Press keys 0 and 8 for the function "Read measured value block" and confirm entry with Q key.

-> Indicated on display:

```
Read measured value block
Input display group number XXX
```

- Press keys 0, 1 and 1 for display group 11 and confirm entry by pressing Q.

```
Read measured value block 11
840 rpm     938 mbar     978 mbar     92 %
```

-> Indicated on display:
- Accelerate vehicle in 3rd gear from about 1500 rpm using full throttle.
- Press PRINT key on V.A.G 1551 at approx. 3000 rpm.

-> Specification on V.A.G 1551: 1650...2100 mbar (in display zone 3)

```
Read measured value block 11
3090 rpm     1866 mbar     1917 mbar
62 %
```

If the specification is not obtained:

- Carry out final control diagnosis and activate the charge pressure control solenoid valve:

=> Repair group 01; Final control diagnosis; Performing final control diagnosis Final control diagnosis Performing final control diagnosis

-> Indicated on display:

```
Final control diagnosis
Charge pressure control solenoid valve -
N75
```

Copyright by Volkswagen AG. Volkswagen AG does not guarantee or accept any liability with respect to the correctness of information in this document. Copying for private or commercial purposes, in part or in whole, is not permitted unless authorised by Volkswagen AG.
satelettronica

The solenoid valve must function and the charge pressure control pressure unit rod must move to and fro (at least 3...4 times, as long as there is vacuum in vacuum reservoir).

- If the rod moves and the charge pressure specifications are not obtained, renew turbocharger.

If rod does not move because solenoid valve is not working:

- Check solenoid valve for charge pressure control (N75) => Page 170 .
- Check vacuum hoses => Page 163 .

If the rod does not move but the solenoid operates:

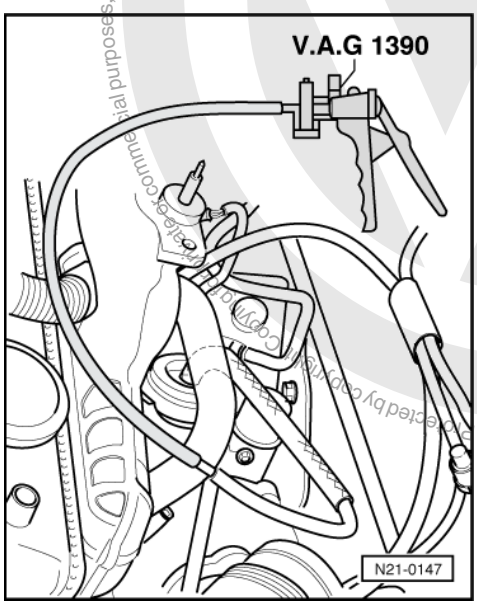

- -> Connect vacuum pump V.A.G 1390 to vacuum hose from charge pressure regulating valve vacuum unit and check rod for ease of movement.
- If the rod does not move easily, replace exhaust turbocharger.

Checking solenoid valve for charge pressure control (N75)

- Switch off ignition.
- Pull connector off charge pressure control solenoid valve.
- Measure resistance between valve contacts.

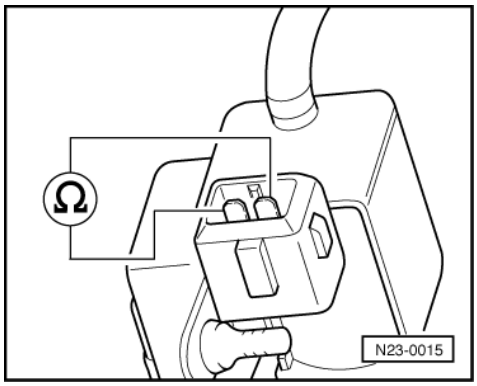

-> Engine code AGR

Specification: 25...45 ω

Volkswagen AG. Volkswagen AG does not guarantee or accept any liability with respect to the correctness of information in this document. Copyright by Volkswagen AG.
satelettronica

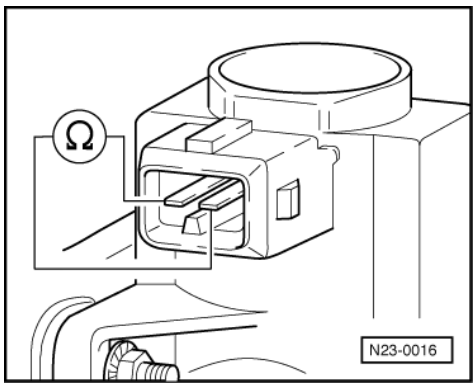

-> Engine code ALH, ASV

Specification: 14...20 ω

If the specification is not obtained:

- Replace charge pressure control solenoid valve (N75).

If the specification is obtained:

- Switch on ignition.

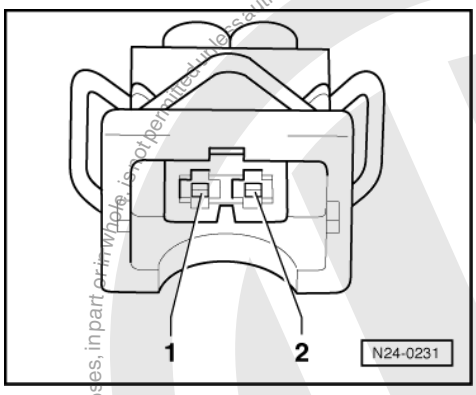

- -> Measure supply voltage at valve connector contact 1 and at engine earth.
  Specification: approx. battery voltage

If the specification is not obtained:

- Switch off ignition.

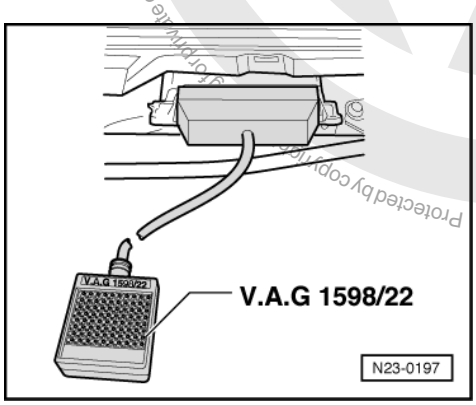

- -> Connect test box V.A.G 1598/22 to control unit wiring harness.

Protected by copyright. Copying for private or commercial purposes, in part or in whole, is not permitted unless authorised by Volkswagen AG. Volkswagen AG does not guarantee or accept any liability with respect to the correctness of information in this document. Copyright by Volkswagen AG.
satelettronica

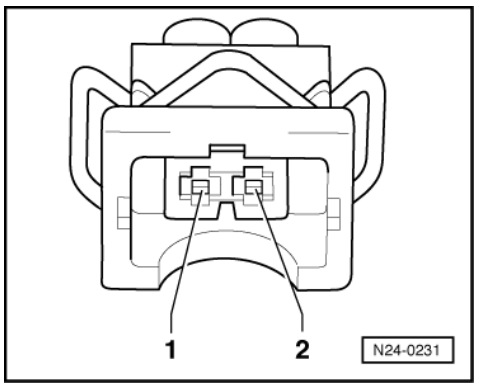

- -> Check wiring between test box and connector for open circuit using current flow diagram.
  Contact 1+ sockets 1 and 2
  Contact 2+ socket 62
  Wire resistance: max. 1.5 ω
- Additionally check wires for short to one another, to vehicle earth and to battery positive.
  Specification: ∞ω

If no fault is detected in the wiring:

- Renew Diesel direct injection system control unit (J248)

=> Repair group 23; Renewing engine control unit, coding and matching; Renewing engine control unit Renewing engine control unit, coding and matching Renewing engine control unit

Protected by copyright. Copying for private or commercial purposes, in part or in whole, is not permitted unless authorised by Volkswagen AG. Volkswagen AG does not guarantee or accept any liability with respect to the correctness of information in this document. Copyright by Volkswagen AG.

satelettronica

26 - Exhaust system

1 - Removing and installing parts of exhaust system

1.1 - Removing and installing parts of exhaust system

Notes:

- Removing and installing exhaust manifold =>Page 149 , Removing and installing turbocharger with attachments.
- After working on the exhaust system ensure that the system is not under stress, and that it has sufficient clearance from the bodywork. If necessary, loosen double and single clamps and align silencer and exhaust pipe so that sufficient clearance is maintained to the bodywork and the support rings are evenly loaded.
- Renew self-locking nuts.

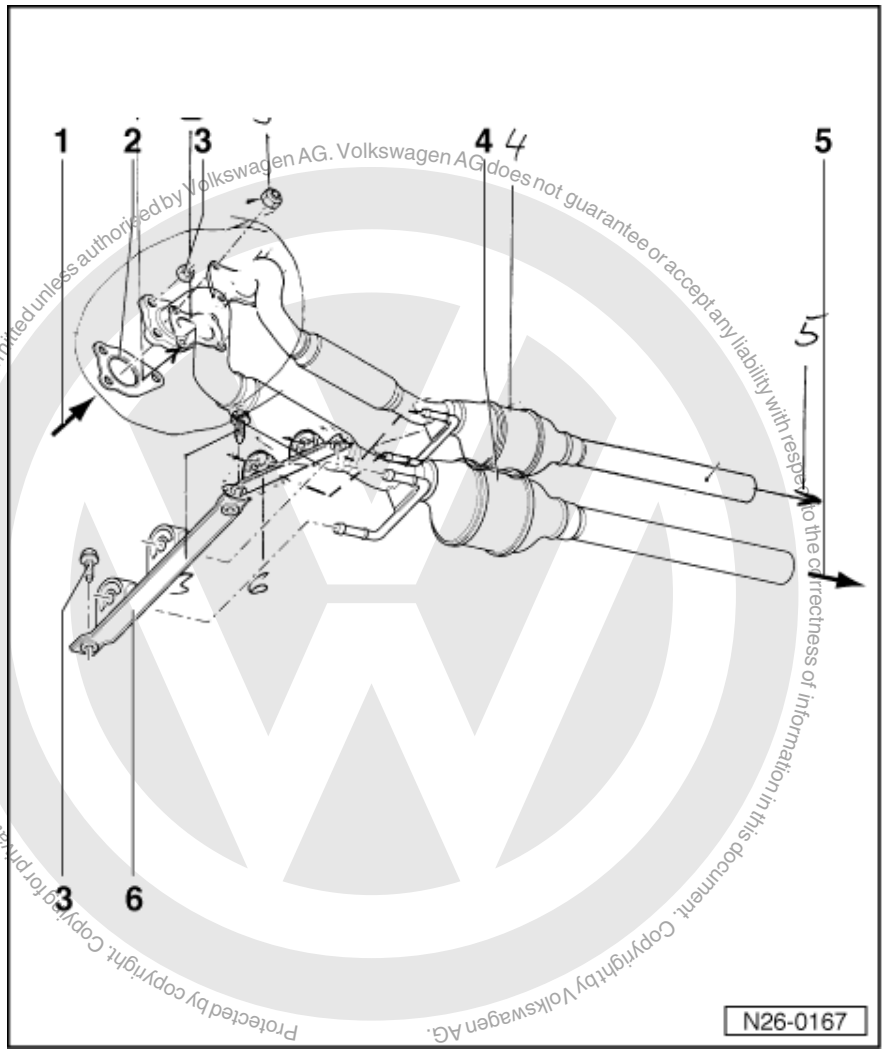

Protected by copyright. Copying for private or commercial purposes, in part or in whole, is not permitted unless authorised by Volkswagen AG. Volkswagen AG does not guarantee or accept any liability with respect to the correctness of information in this document. Copyright by Volkswagen AG.

Front exhaust pipe and catalyst with attachments, engine codes AGR, ALH, ASV

satelettronica

Exhaust manifold, front exhaust pipe and catalyst with attachments, engine codes AGP, AQM, AYQ => Page 174 .

1 From turbocharger
2 Gasket
- Renew

3 25 Nm
4 Catalyst
5 To front silencer
6 Mounting

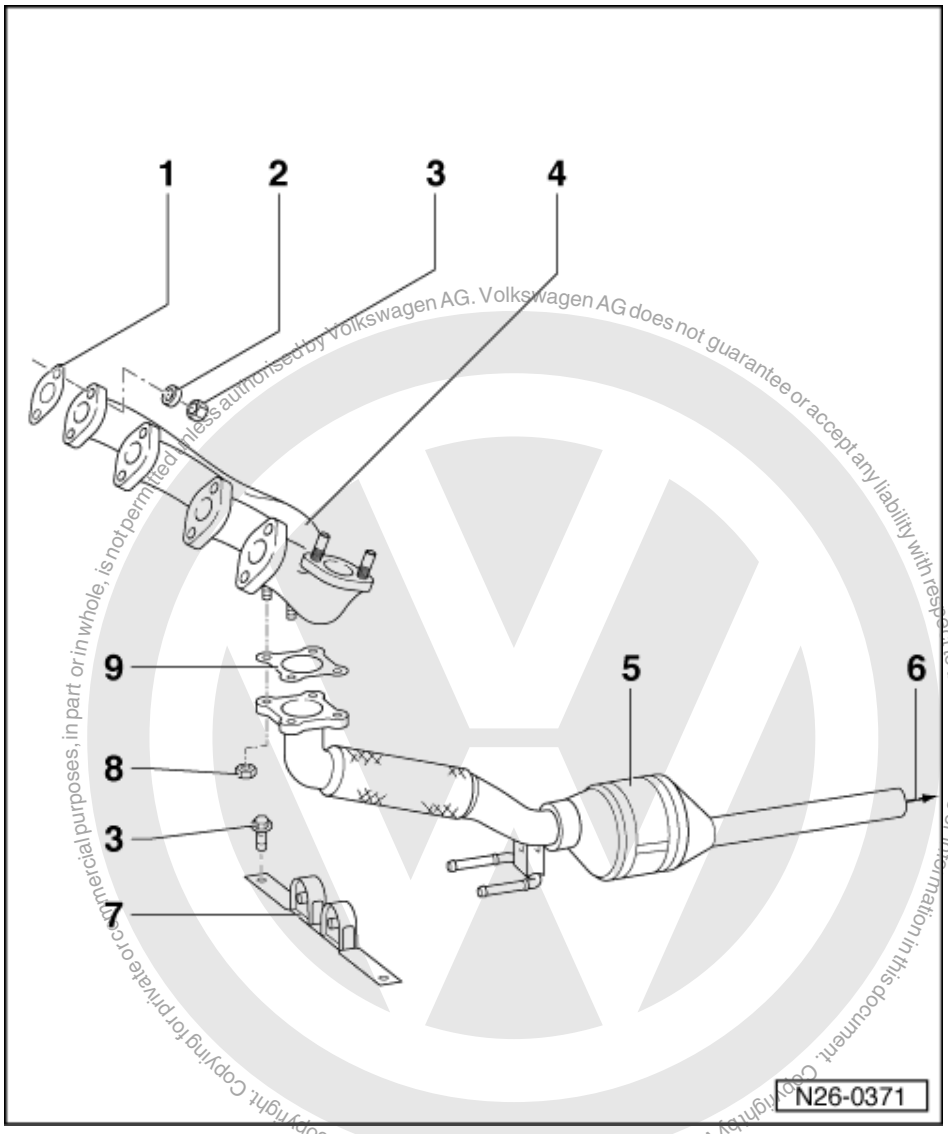

Exhaust manifold, front exhaust pipe and catalyst with attachments, engine codes AGP, AQM, AYQ

1 Seal
- Note installation position
- Renew

2 Washer
3 25 Nm
4 Exhaust manifold
5 Catalyst

satelettronica

6 To front silencer
7 Mounting
8 40 Nm
9 Gasket
- Renew

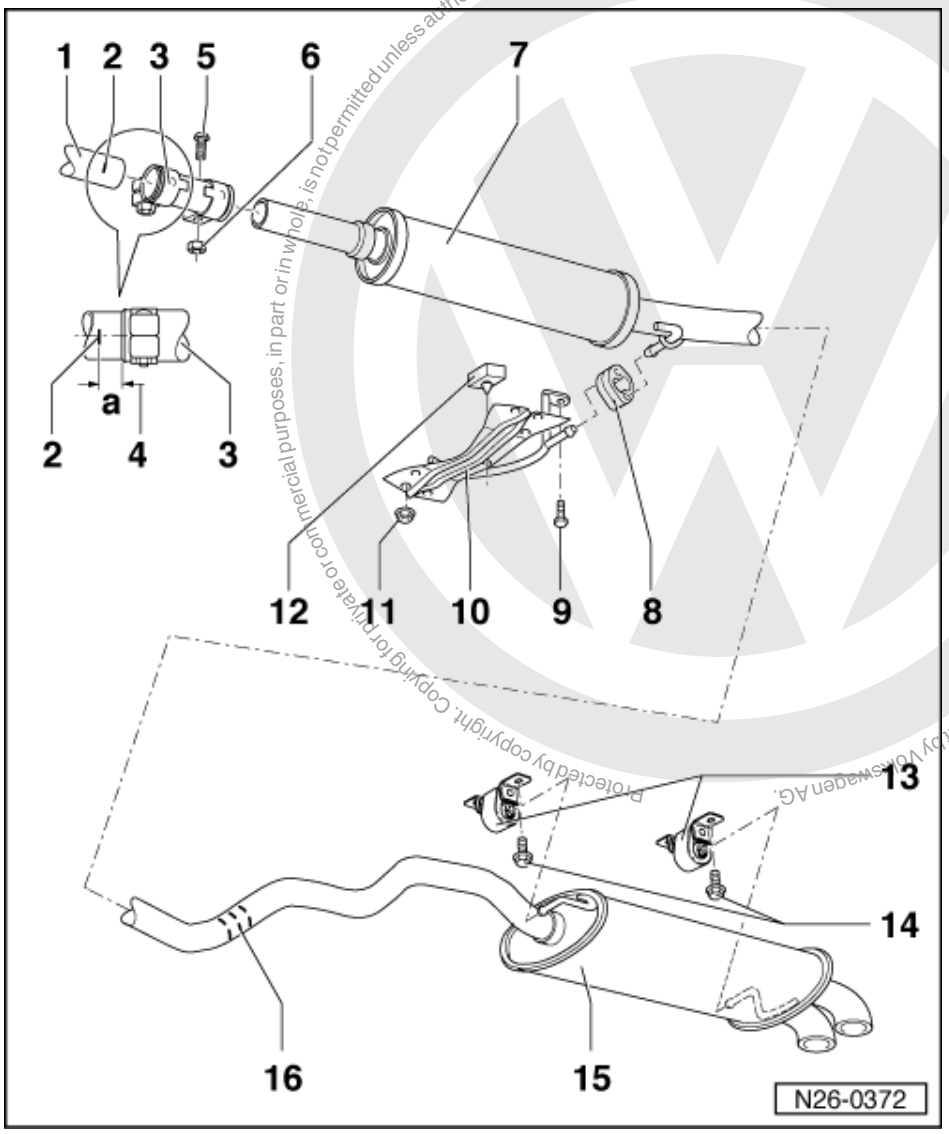

Silencer with mountings
1 Front exhaust pipe with catalyst
2 Marking
3 Double clamp
4 Dimension-a- = ca. 5 mm
5 Carriage bolt
6 40 Nm
7 Front silencer
8 Mounting
- Renew if damaged

9 25 Nm
10 Connecting piece
11 15 Nm

Protected by copyright. Copying for private or commercial purposes, in part or in whole, is not permitted unless authorised by Volkswagen AG. Volkswagen AG does not guarantee or accept any liability with respect to the correctness of information in this document. Copyright by Volkswagen AG.
satelettronica

12 Bump stop

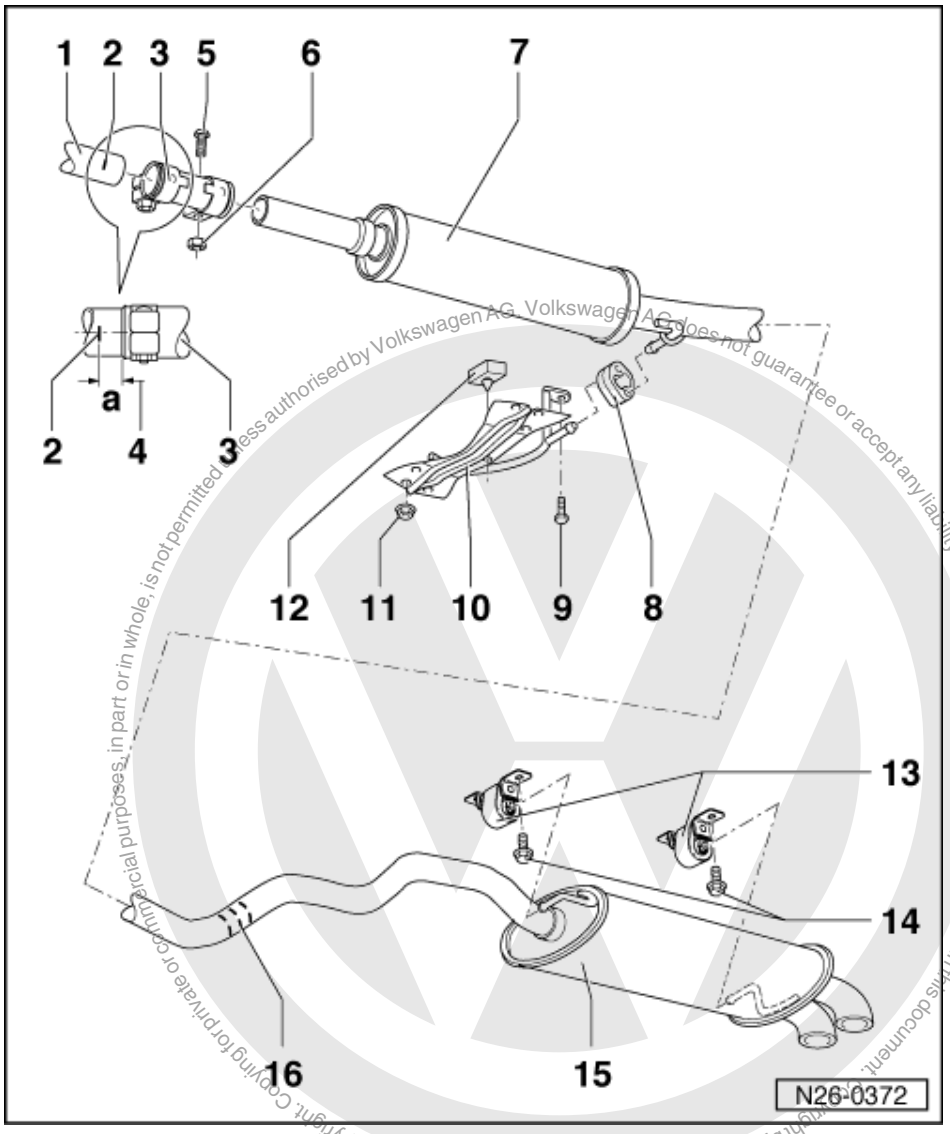

Protected by copyright. Copying for private or commercial purposes, in part or in whole, is not permitted unless authorised by Volkswagen AG. Volkswagen AG does not guarantee or accept any liability with respect to the correctness of information in this document. Copyright by Volkswagen AG.

13 Mounting
- With retaining ring
- Renew if damaged

14 20 Nm + 1/4 turn (90 °) further

15 Rear silencer

16 Separating point
- For repair cases
- Marked by three impressions on circumference of exhaust pipe
- As standard, front and rear silencers are installed as a single component. For repair purposes the front and rear silencers are supplied individually with a double clamp for connecting together.
- Cut through connecting pipe with suitable tool, e.g. pneumatic jig-saw V.A.G 1523, at right angle to separating point => Fig. 1

satelettronica

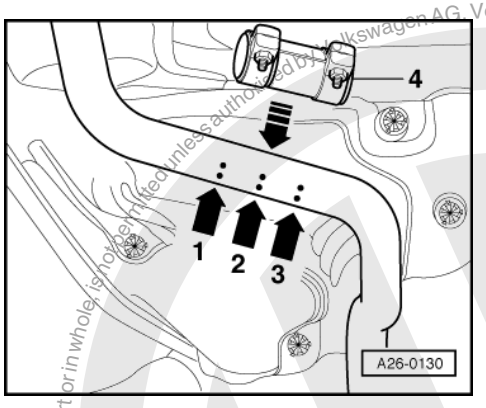

-> Fig. 1 Separating point on exhaust pipe

- Separate exhaust pipe at right angles at separating point -arrow 2-.
- When installing fit repair type double clamp -4- at side markings -arrows 1 and 3-.
  Tightening torque 40 Nm

2 - Exhaust gas recirculation system: Engine codes AGR, ALH, ASV

2.1 - Exhaust gas recirculation system: Engine codes AGR, ALH, ASV

Notes:

- The control of the exhaust gas recirculation system is undertaken by diesel direct injection system control unit (J248) via EGR valve (N18) (electric) to exhaust gas recirculation valve (mechanical).
- Checking actuation of EGR valve (N18):

=> Repair group 01; Final control diagnosis; Performing final control diagnosis Final control diagnosis Performing final control diagnosis

- The cone-shaped plunger in the mechanical exhaust gas recirculation valve ensures that various cross sectional openings are possible at different plunger lifts.
- Pulsed control makes every conceivable valve position possible.
- Renew self-locking nuts.

Volkswagen AG. Volkswagen AG does not guarantee or accept any liability with respect to the correctness of information in this document. Copyright by Volkswagen AG. Copying for private or commercial purposes, in part or in whole, is not permitted unless authorised by Volkswagen AG. Copyright by copyright.
satelettronica

2.2 - Removing and installing parts of exhaust gas recirculation system

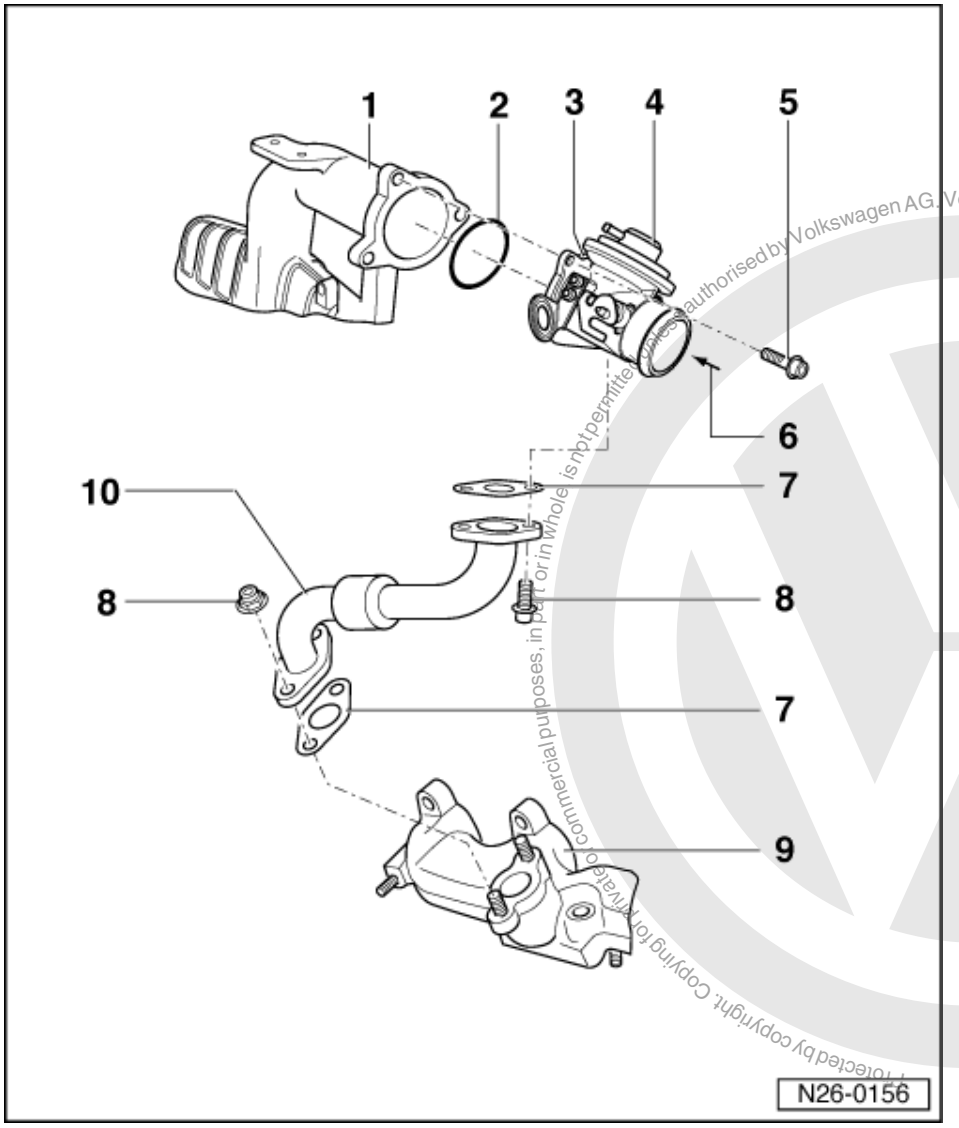

1 Intake manifold
2 O-ring
- Renew

3 Intake connecting flange
- With exhaust gas recirculation valve and control flap

4 Exhaust gas recirculation valve (mechanical)
- Component part of intake connecting flange
- Can only be replaced together with intake connecting flange
- Checking => Page 180
- Checking activation

=> Repair group 01; Final control diagnosis; Performing final control diagnosis Final control diagnosis Performing final control diagnosis

5 10 Nm
6 From charge air cooler

Protected by copyright. Copying for private or commercial purposes, in part or in whole is not permitted unless authorised by Volkswagen AG. Volkswagen AG does not guarantee or accept any liability with respect to the correctness of information in this document. Copyright by Volkswagen AG.
satelettronica

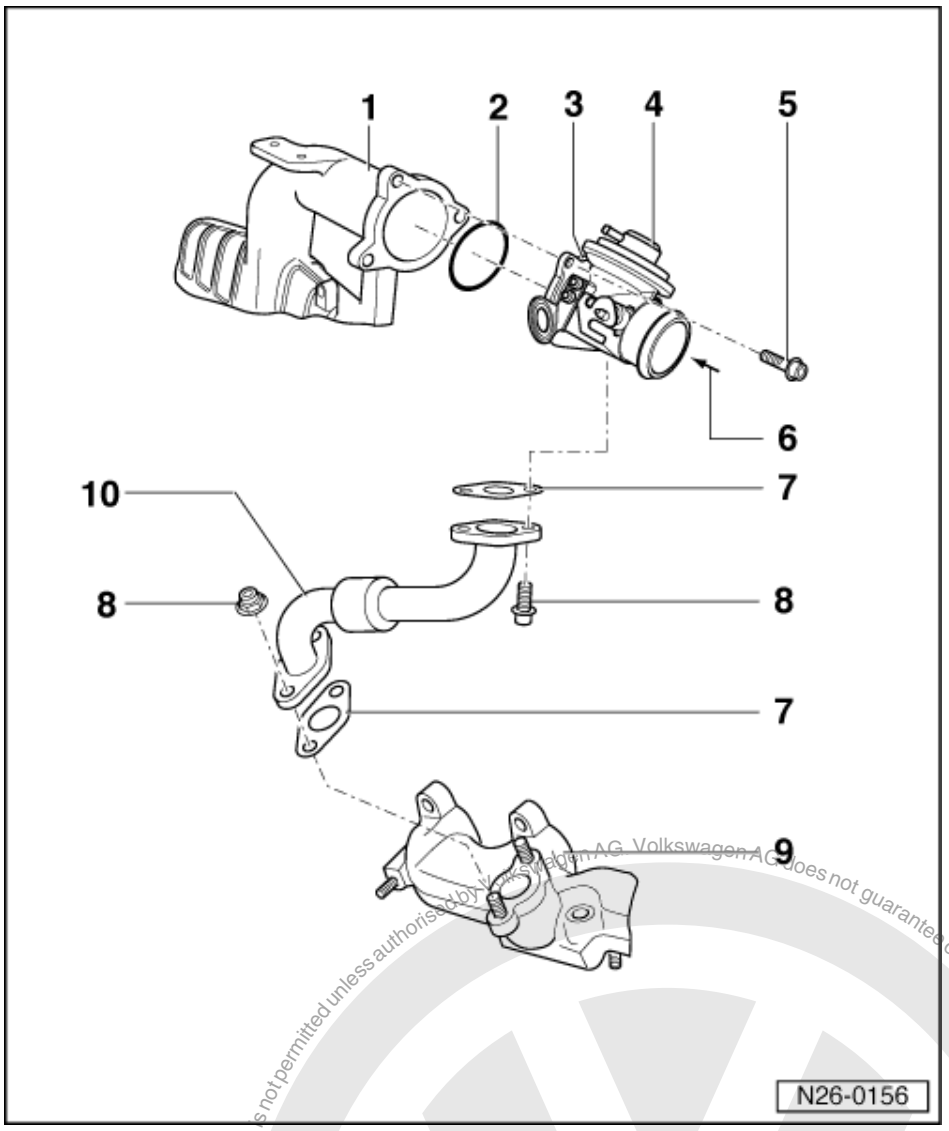

7 Gasket
- Renew

8 25 Nm

9 Exhaust manifold

10 Connecting pipe

Protected by copyright. Copying for private or commercial purposes, partly or in whole, is not permitted unless authorised by Volkswagen AG. Volkswagen AG does not guarantee or accept any liability with respect to the correctness of information in this document. Copyright by Volkswagen AG.
satelettronica

2.3 - Vacuum hose connection diagram

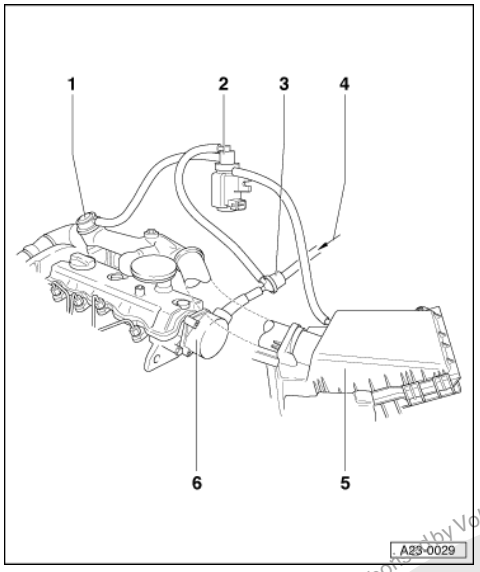

1 Exhaust gas recirculation valve
2 Exhaust gas recirculation valve (N18)
3 Non-return valve
4 From brake servo
5 Air cleaner
6 Vacuum pump

2.4 - Checking exhaust gas recirculation valve (mechanical)

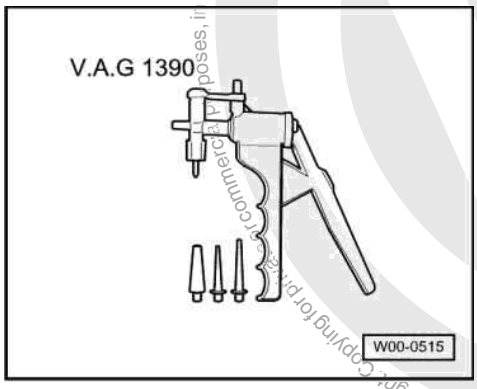

Special tools, workshop equipment, testers, measuring instruments and auxiliary items required

- -> V.A.G 1390 Hand vacuum pump

Test sequence

- Remove engine cover.
- Disconnect charge air cooler/manifold connecting hose at intake manifold.
- Pull vacuum hose off (mechanical) exhaust gas recirculation valve.

Protected by copyright. Copyright by Volkswagen AG. Volkswagen AG does not guarantee or accept any liability with respect to the correctness of information in this document. Copyright by Volkswagen AG.
Protected by copyright. Copying for private or commercial purposes, in part or in whole, is not permitted unless authorised by Volkswagen AG.
satelettronica

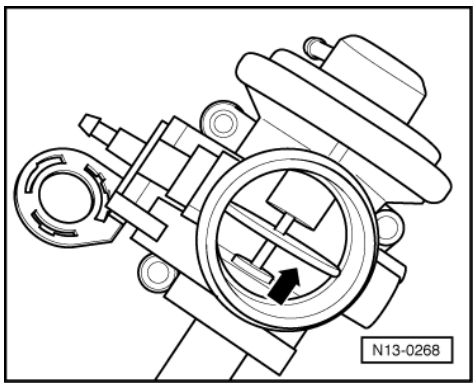

- Connect hand vacuum pump V.A.G 1390 to valve.
- -> Operate pump and observe membrane rod.

  The membrane rod must move in direction of arrow.

- Pull hand vacuum pump hose off exhaust gas recirculation valve.

  The membrane rod must move back against the direction of arrow to its original position.

Protected by copyright. Copying for private or commercial purposes, in part or in whole, is not permitted unless authorised by Volkswagen AG. Volkswagen AG does not guarantee or accept any liability with respect to the correctness of information in this document. Copyright by Volkswagen AG.

satelettronica

2.5 - Checking exhaust gas recirculation

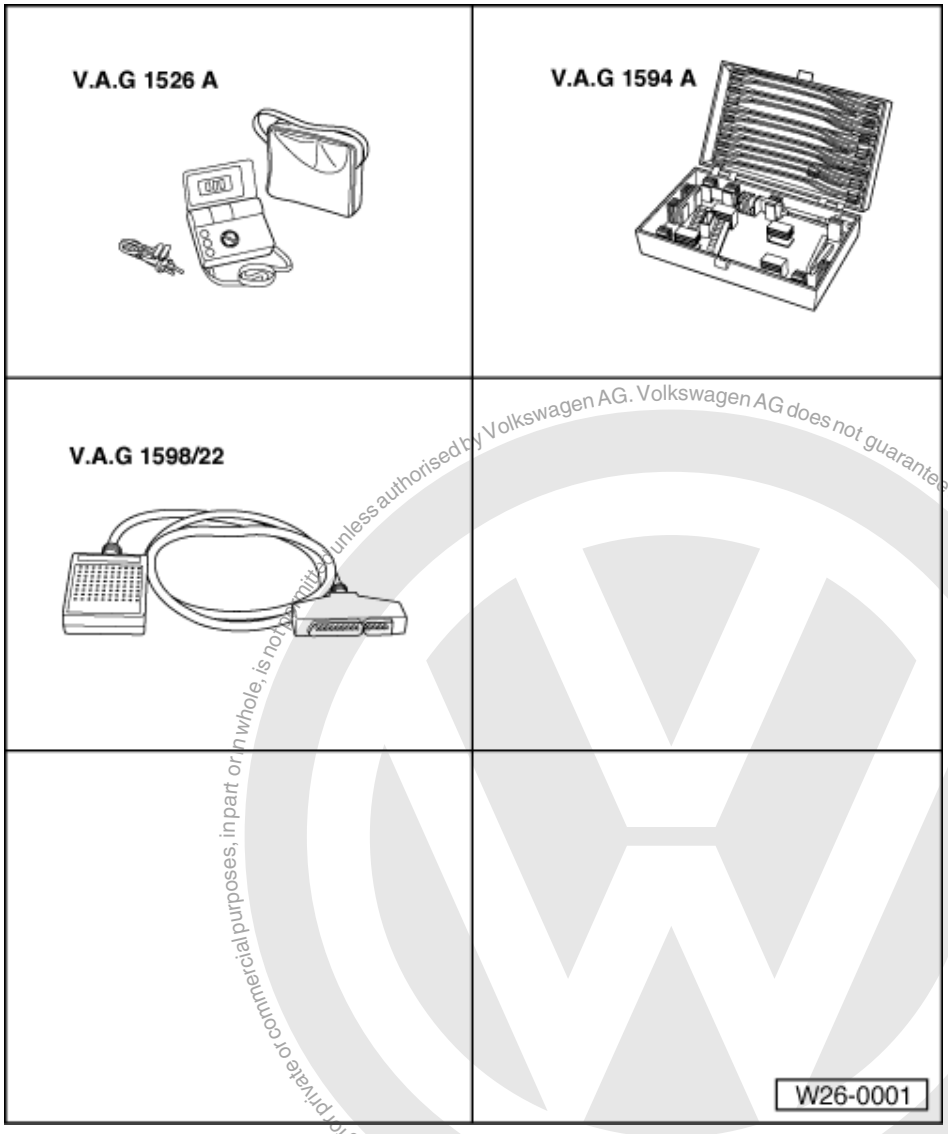

Protected by copyright. Copying for private or commercial purposes, in part or in whole, is not permitted unless authorised by Volkswagen AG. Volkswagen AG does not guarantee or accept any liability with respect to the correctness of information in this document. Copyright by Volkswagen AG.

satelettronica

Special tools, workshop equipment, test and measuring appliances and auxiliary items required

- V.A.G 1526 Hand multimeter
- V.A.G 1594 A Adapter set
- V.A.G 1598/22 Test box
- Fault reader V.A.G 1551 or vehicle system tester V.A.G 1552 with cable V.A.G 1551/3
- Current flow diagram

Test sequence

The exhaust gas recirculation function is checked in function 04 (basic setting). With this method, the EGR valve (electric) is pulsed every 10 seconds so that the extreme values for exhaust gas recirculation (air mass meter) measured value block 003 can be read in display zone 3.

- With engine running at idle speed, connect fault reader V.A.G 1551 (V.A.G 1552) and select engine electronics control unit with the "Address word" 01:

=> Repair group 01; Self-diagnosis; Connecting fault reader V.A.G 1551 and selecting engine electronics control unit Self-diagnosis Connecting fault reader V.A.G 1551 and selecting engine electronics control unit

-> Indicated on display:

```
Rapid data transfer      HELP
Select function XX
```

- Press keys 0 and 4 for the function "Introduction of basic setting" and confirm entry with Q key.

-> Indicated on display:

```
Basic setting
Input display group number XXX
```

- Press keys 0, 0 and 3 for "Display group number 3" and confirm entry with Q key.

-> Indicated on display:
(1...4 = Display zones)

```
System in basic setting      3
900 rpm     EGRn.active      500 mg/H
0%
```

The display in display zone 2 must fluctuate every 10 secs. between EGR active and EGRn.active.
The displays in display zones 3 and 4 must fluctuate within following control range:

Note:

If a constant value of 550 mg/H is indicated in display zone 3, check air mass meter

=> Repair group 23; Servicing Diesel direct injection system; Checking air mass meter Servicing Diesel direct injection system Checking air mass meter

EGRn.active

- Specification display zone 3
  320...550 mg/lift
- Specification display zone 4
  0...5%

EGR.active

Engine codes AGR, ALH

- Specification display zone 3
  140...340 mg/lift
- Specification display zone 4
  95...100 %

Engine codes ASV

- Specification display zone 3
  180...340 mg/lift
- Specification display zone 4
  95...100 %

Continued for all engine codes

Note:

The displays in display zone 3 are pressure dependent and therefore also elevation dependent. The figures given relate to the sea level. If due to the elevation the measured values deviate greatly then check whether there is a difference of at least 100 mg/H between the EGR active and EGRn. active displays in display zone 3.

If the specifications are not obtained:

- Check mechanical exhaust gas recirculation valve
  => page 180

Protected by copyright. Copying for private or commercial purposes, in part or in whole, is not permitted unless authorised by Volkswagen AG. Volkswagen AG does not guarantee or accept any liability with respect to the correctness of information in this document. Copyright by Volkswagen AG.
satelettronica

- Check vacuum hoses => Page 180

2.6 - Checking EGR valve

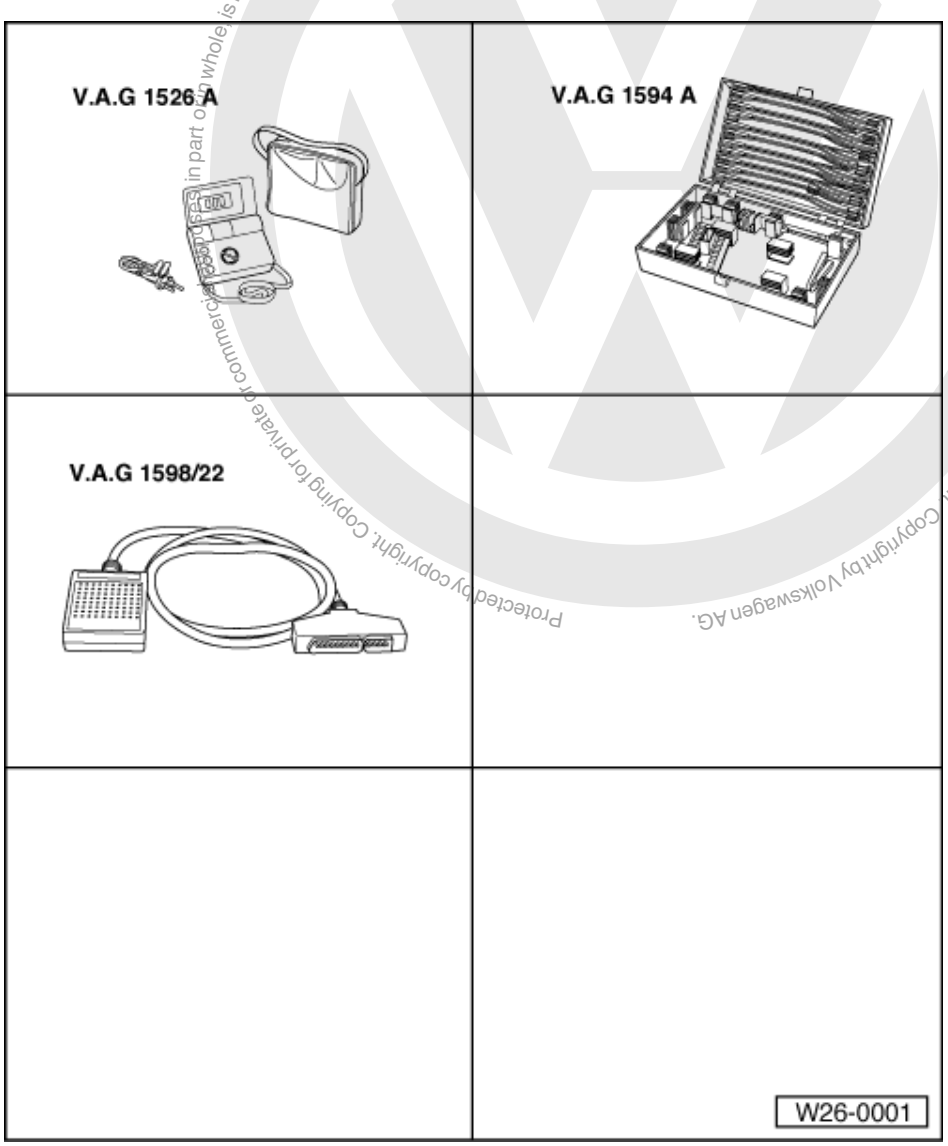

Special tools, workshop equipment, test and measuring appliances and auxiliary items required

- V.A.G 1526 Hand multimeter
- V.A.G 1594 A Adapter set
- V.A.G 1598/22 Test box
- Current flow diagram

Check conditions

- The fuses must be OK.
- The battery voltage must be at least 11.5 V.

Protected by copyright. Copying for private or commercial purposes, in part or in whole, is not permitted unless authorised by Volkswagen AG. Volkswagen AG does not guarantee or accept any liability with respect to the correctness of information in this document. Copyright by Volkswagen AG.
satelettronica

Test sequence

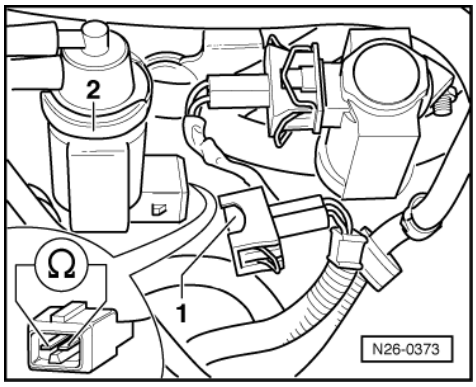

- -> Pull connector -1- off exhaust gas recirculation valve -2-.
- Measure resistance at valve.
  Specification: 14 ... 20 ω

If the specification is not obtained:

- Replace EGR valve (N18).

Note:

At room temperature the resistance lies in the the lower tolerance region and at operating temperature in upper tolerance region.

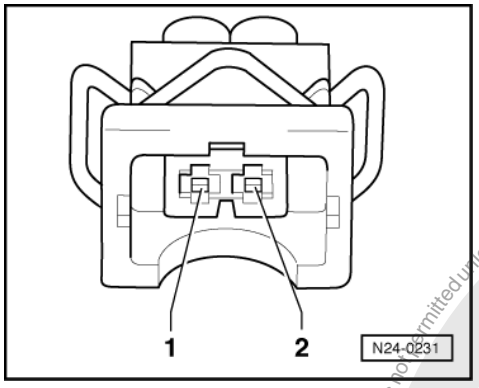

If the specification is obtained:

- Switch on ignition.
- -> Measure supply voltage at valve connector contact 1 and at engine earth.
  Specification: approx. battery voltage

If the specification is not obtained:

- Switch off ignition.

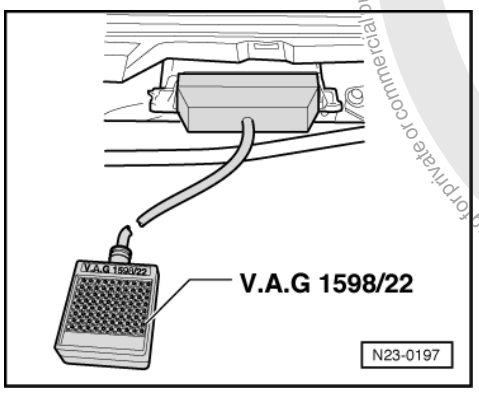

Protected by copyright. Copying for private or commercial purposes, in part or in whole, is not permitted unless authorised by Volkswagen AG. Volkswagen AG does not guarantee or accept any liability with respect to the correctness of information in this document. Copyright by Volkswagen AG.
satelettronica

- -> Connect test box V.A.G 1598/22 to control unit wiring harness.

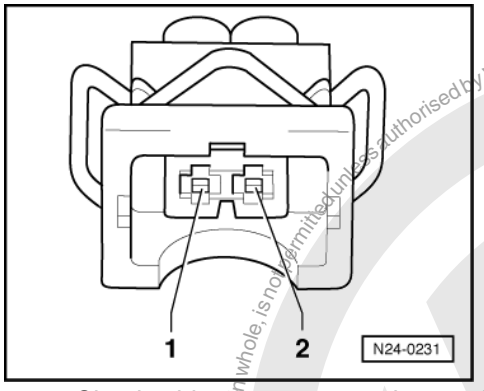

- -> Check wiring between test box and connector for open circuit according to current flow diagram.
  Contact 1+ socket 2+28
  Contact 2+ socket 29
  Wire resistance: max. 1.5 ω
- Additionally check wires for short to one another, to vehicle earth and to battery positive.
  Specification: ∞ω

If no fault is detected in the wiring:

- Renew Diesel direct injection system control unit (J248)

=> Repair group 23; Renewing engine control unit, coding and matching; Renewing engine control unit Renewing engine control unit, coding and matching Renewing engine control unit

3 - Exhaust gas recirculation system: Engine codes AGP, AQM, AYQ

3.1 - Exhaust gas recirculation system: Engine codes AGP, AQM, AYQ

Notes:

- The control of the exhaust gas recirculation system is undertaken by diesel direct injection system control unit (J248) via EGR valve (N18) (electric) to exhaust gas recirculation valve (mechanical).
- Checking actuation of EGR valve (N18):

=> Repair group 01; Final control diagnosis; Performing final control diagnosis Final control diagnosis Performing final control diagnosis

- The cone-shaped plunger in the mechanical exhaust gas recirculation valve ensures that various cross sectional openings are possible at different plunger lifts.
- Pulsed control makes every conceivable valve position possible.
- Renew self-locking nuts.

Copyright by Volkswagen AG. Volkswagen AG does not guarantee or accept any liability with respect to the correctness of information in this document. Copying for private or commercial purposes, in part or in whole, is not permitted unless authorised by Volkswagen AG.

satelettronica

3.2 - Removing and installing parts of exhaust gas recirculation system

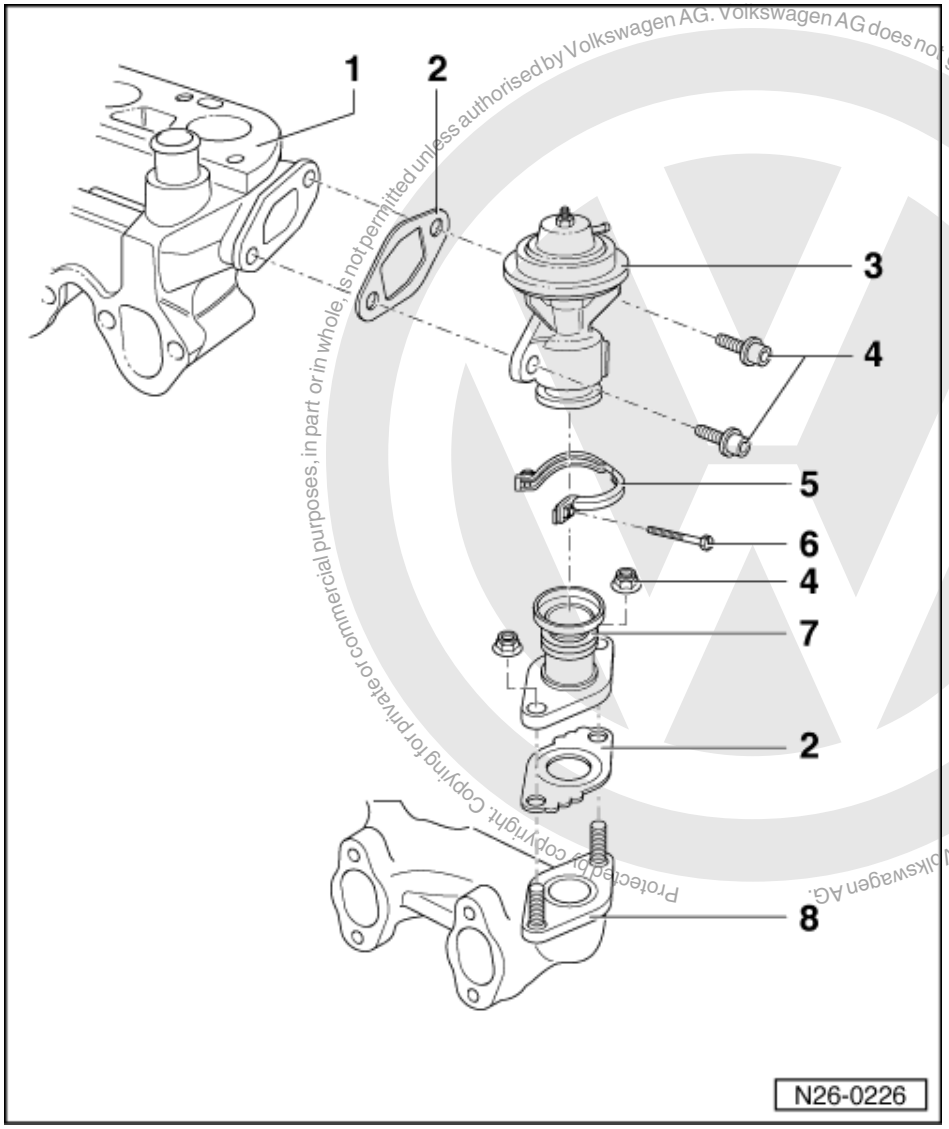

Protected by copyright. Copying for private or commercial purposes, in part or in whole, is not permitted unless authorised by Volkswagen AG. Volkswagen AG does not guarantee or accept any liability with respect to the correctness of information in this document. Copyright by Volkswagen AG.

satelettronica

1 Intake manifold lower part
2 Gasket
- Renew

3 Exhaust gas recirculation valve (mechanical)
- Checking => Page 189
- Checking activation

=> Repair group 01; Final control diagnosis; Performing final control diagnosis Final control diagnosis Performing final control diagnosis

4 25 Nm
5 Clamp
6 10 Nm
7 Connecting pipe
8 Exhaust manifold

3.3 - Vacuum hose connection diagram

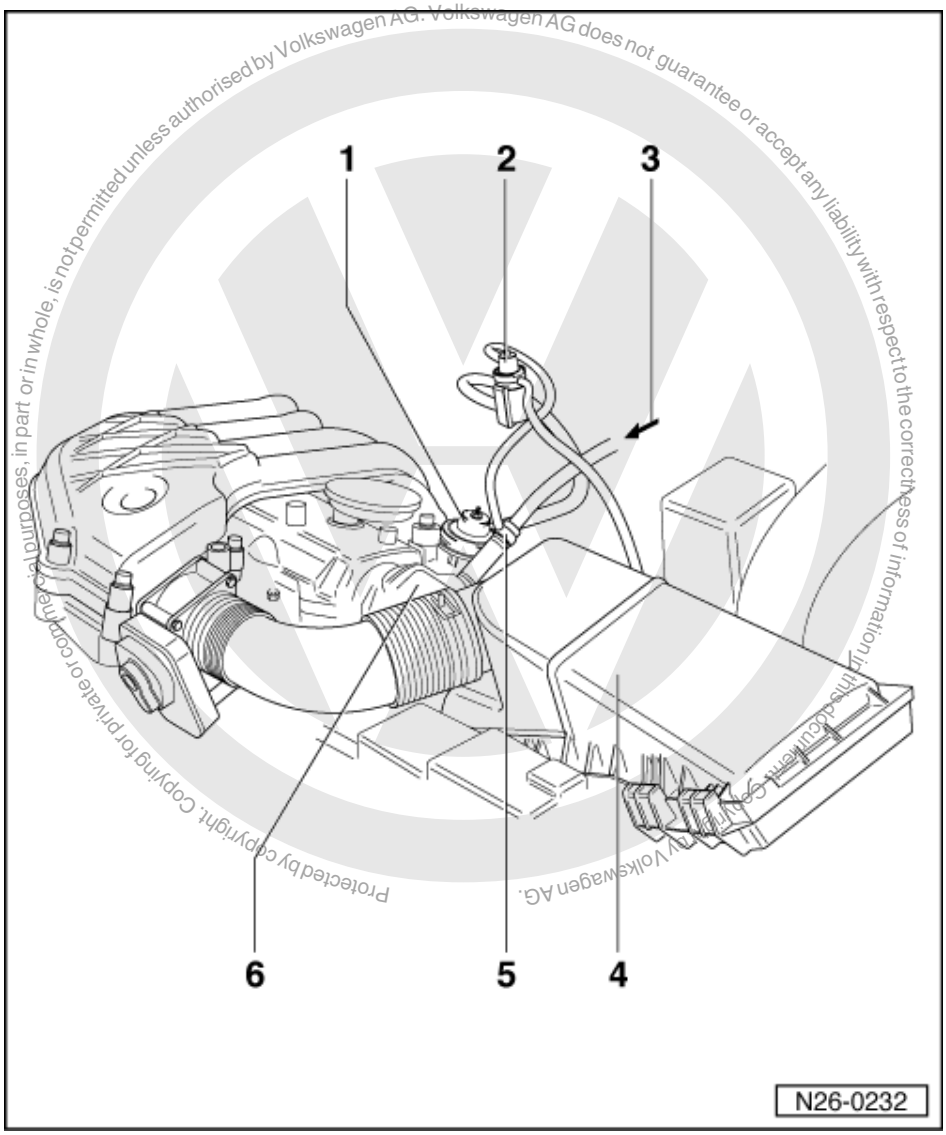

Protected by copyright. Copying for private or commercial purposes, in part or in whole, is not permitted unless authorised by Volkswagen AG. Volkswagen AG does not guarantee or accept any liability with respect to the correctness of information in this document. Copyright by Volkswagen AG.

1 Exhaust gas recirculation valve
2 Exhaust gas recirculation valve (N18)
3 From brake servo
4 Air cleaner
5 Non-return valve
6 Vacuum pump

satelettronica

3.4 - Checking exhaust gas recirculation valve (mechanical)

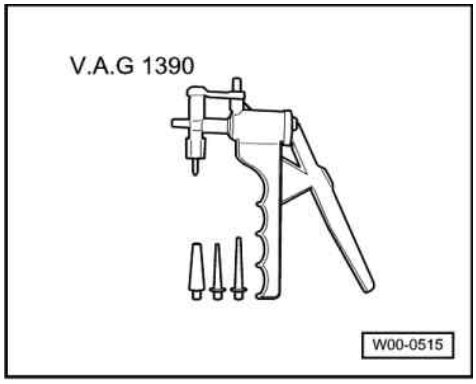

Special tools, workshop equipment, testers, measuring instruments and auxiliary items required

- -> V.A.G 1390 Hand vacuum pump

Test sequence

- Remove engine cover.
- Pull vacuum hose off (mechanical) exhaust gas recirculation valve.
- Connect hand vacuum pump V.A.G 1390 to valve.

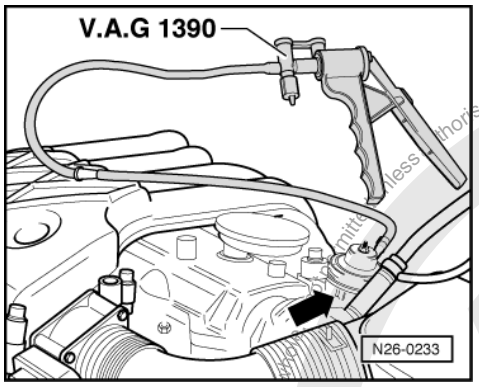

- -> Operate pump.
  Membrane must move in direction of
  vacuum connection (establish by feeling from below -arrow-).
- Pull hand vacuum pump hose off (mechanical) exhaust gas recirculation valve.
  The valve must clearly be heard to close (membrane moves
  in direction of exhaust manifold).

Protected by copyright. Copying for private or commercial purposes, in part or in whole, is not permitted unless authorised by Volkswagen AG. Volkswagen AG does not guarantee or accept any liability with respect to the correctness of information in this document. Copyright by Volkswagen AG.
satelettronica

3.5 - Checking EGR valve

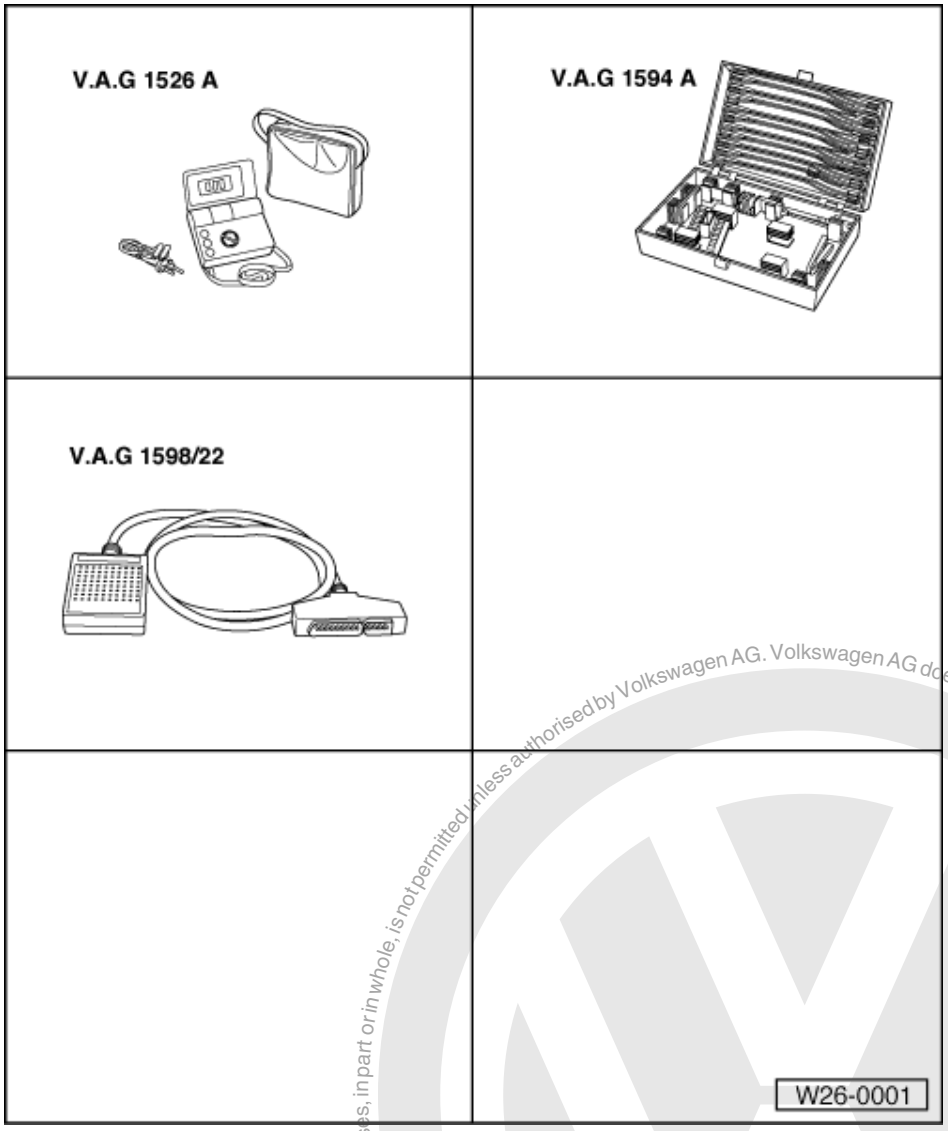

Special tools, workshop equipment, test and measuring appliances and auxiliary items required

- V.A.G 1526 Hand multimeter
- V.A.G 1594 A Adapter set
- V.A.G 1598/22 Test box
- Current flow diagram

Check conditions

- The fuses must be OK.
- The battery voltage must be at least 11.5 V.

Protected by copyright. Copying for private or commercial purposes, in part or in whole, is not permitted unless authorised by Volkswagen AG. Volkswagen AG does not guarantee or accept any liability with respect to the correctness of information in this document. Copyright by Volkswagen AG.
satelettronica

Test sequence

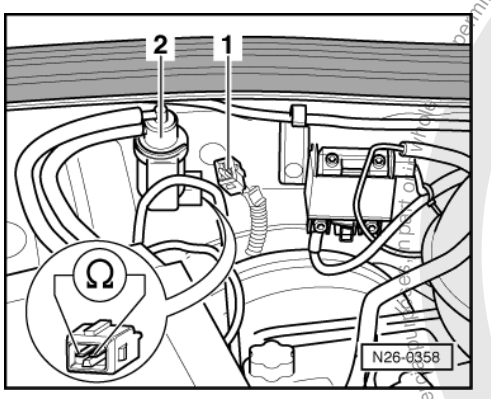

- -> Pull connector -1- off exhaust gas recirculation valve -2-.
- Measure resistance at valve.
  Specification: 14 ... 20 ω

If the specification is not obtained:

- Replace EGR valve (N18).

Note:

At room temperature the resistance lies in the the lower tolerance region and at operating temperature in upper tolerance region.

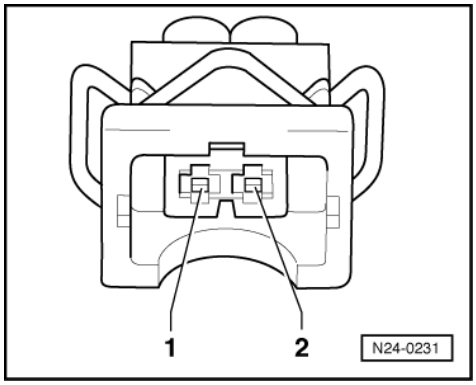

If the specification is obtained:

- Switch on ignition.
- -> Measure supply voltage at valve connector contact 1 and at engine earth.
  Specification: approx. battery voltage

If the specification is not obtained:

- Switch off ignition.

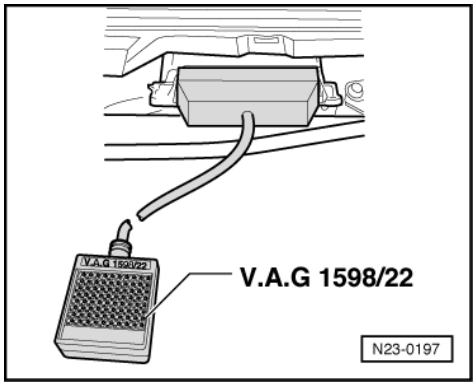

Protected by copyright. Copying for private or commercial purposes, in part or in whole, is not permitted unless authorised by Volkswagen AG. Volkswagen AG does not guarantee or accept any liability with respect to the correctness of information in this document. Copyright by Volkswagen AG.
satelettronica

- -> Connect test box V.A.G 1598/22 to control unit wiring harness.

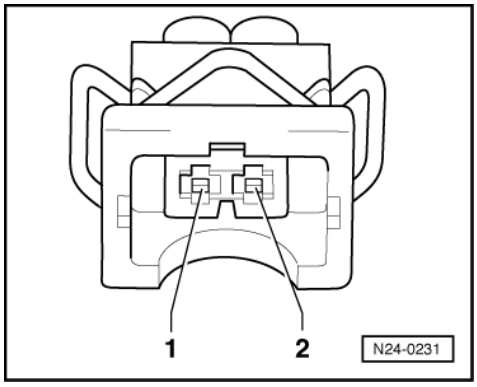

- -> Check wiring between test box and connector for open circuit according to current flow diagram.
  Contact 1+ socket 2+28
  Contact 2+ socket 29
  Wire resistance: max. 1.5 ω
- Additionally check wires for short to one another, to vehicle earth and to battery positive.
  Specification: ∞ω

If no fault is detected in the wiring:

- Renew Diesel direct injection system control unit (J248)

=> Repair group 23; Renewing engine control unit, coding and matching; Renewing engine control unit Renewing engine control unit, coding and matching Renewing engine control unit

Protected by copyright. Copying for private or commercial purposes, in part or in whole, is not permitted unless authorised by Volkswagen AG. Volkswagen AG does not guarantee or accept any liability with respect to the correctness of information in this document. Copyright by Volkswagen AG.

satelettronica